Chapter 5

Bosch Motronic MP 3.2

Contents

Vehicles Covered

Citroën

Model	Engine Code	Year	EMS System
Evasion 2.0i turbo cat	XU10J2CTEZ/L (RGX)	1994 to 1999	Bosch Motronic MP3.2
Synergie 2.0i turbo cat	XU10J2CTEZ/L (RGX)	1994 to 1999	Bosch Motronic MP3.2
Xantia 2.0i 16v cat	XU10J4D/Z (RFY)	1993 to 1997	Bosch Motronic MP3.2
Xantia Activa 2.0i	XU10J4D/Z (RFT)	1994 to 1997	Bosch Motronic MP3.2
Xantia Turbo 2.0i CT	XU10J2CTE/L3 (RGX)	1995 to 1999	Bosch Motronic MP3.2
XM 2.0i turbo cat	XU10J2TE/Z (RGY)	1993 to 1994	Bosch Motronic MP3.2
XM 2.0i CT turbo cat	XU10J2TE/L/Z (RGX)	1994 to 1999	Bosch Motronic MP3.2
ZX 2.0i 16v cat	XUJ10J4/D/L/Z (RFY)	1992 to 1997	Bosch Motronic MP3.2
ZX 2.0i 16v	XUJ10J4/D/L/Z (RFT)	1993 to 1997	Bosch Motronic MP3.2

Peugeot

Model	Engine Code	Year	EMS System
306 2.0i 16v cat	XU10J4L/Z (RFY)	1993 to 1997	Bosch Motronic MP3.2
405 2.0i 16v cat	XU10J4/Z (RFY)	1992 to 1995	Bosch Motronic MP3.2
406 2.0l cat Turbo	XU10J2CTE	1997 to 1999	Bosch Motronic MP3.2
605 2.0i turbo cat	XU10J2TEL/Z (RGY)	1993 to 1994	Bosch Motronic MP3.2
605 2.0i turbo	XU10J2CTEL/Z (RGX)	1995 to 1999	Bosch Motronic MP3.2
806 2.0 Turbo	XU10J2CTEL/Z (RGX)	1995 to 1999	Bosch Motronic MP3.2

Introduction

The Bosch Motronic MP3.2 Electronic Engine Management System (EMS) used to control a number of Citroen and Peugeot engines from about 1993 is a fully integrated system that controls primary ignition, fuelling and idle control from within the same ECM **(see Illustration 5.1).** MP3.2 is an enhancement of MP3.1 and the number of ECM pins has increased from 35 to 55. It also has the capability of controlling a turbo-charged and variable-length intake manifold vehicle.

The ECM jointly processes the ignition point and the injection duration so that the best moment for ignition and fuelling are determined for every operating condition. The injection function of the Bosch Motronic system has evolved from the well tried 'L' jetronic system, although many refinements have improved operation. A 55-pin multiplug connects the ECM to the battery, sensors and actuators.

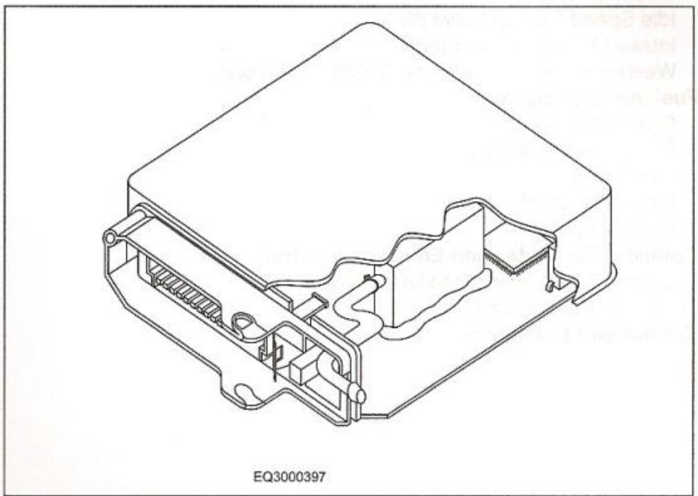

5.1 Motronic MP3.2 ECM

Basic ECM Operation (MPi)

A permanent voltage supply is made from the vehicle battery to pin No 18 of the ECM. This allows the self-diagnostic function to retain data of an intermittent nature. Once the ignition is switched on, the main fuel injection relay applies a voltage supply to ECM pin No 37 and also to the fuel Injectors and ISCV.

The majority of sensors (other than those that generate a voltage such the CAS and OS), are now provided with a 5.0 volt reference supply from a relevant pin on the ECM. When the engine is cranked or run, a speed signal from the CAS causes the ECM to earth pin No 3 so that the relay applies voltage to the ignition coils and fuel pump. As the engine continues cranking, the ECM completes each actuator circuit by pulsing the relevant wire to earth and the injectors, ISCV, ignition coils and fuel pump will all commence running.

Reference Voltage

Voltage supply from the ECM to many of the engine sensors is at a 5.0 volt reference level. This ensures a stable working voltage unaffected by variations in system voltage.

The earth return connection for some engine sensors is made through an ECM pin that is not directly connected to earth. The ECM internally connects that pin to earth via one of the ECM pins that are directly connected to earth.

ECM Power Supplies and Earths Tests

nbv Values

	Volts
Ignition on	11.5 – 13.5
Engine cranking	8.0 +
Engine running	13.0 – 15.9

ECM Voltage Measurements

Terminal Numbers

ECM	Item	Condition	Volts
18	Battery: t30	Ignition off	nbv
37	Relay output	Ignition on	nbv
36	Relay driver	Ignition off	nbv
36	Relay driver	Ignition on	1.25 (max)
3	Relay driver	Ignition on	nbv
3	Relay driver	Cranking/running	1.25 (max)
14, 19, 24 & 47	ECM earth	Ignition on	0.25 (max)

For local wiring diagram **(see Illustration 5.2 or 5.3 or 5.4 or 5.5 or 5.6)**

Checking the ECM (General)

1 Inspect the ECM multi-plug for corrosion, and damage.

2 Check that the connector terminal pins are fully pushed home and making good contact with the ECM multi-plug.

Voltage Measurements at ECM Connections

Note: *ECM pin No 19 is usually the ECM earth for the Bosch Motronic MP3.2 EMS. For this reason, where possible, pin No 19 should be used for the voltmeter or 'scope earth connection. Where pin No 19 is not available, another ECM earth pin may be used.*

ECM Pin No 18

Note: *ECM pin No 18 is directly connected to the battery (+) terminal and a voltage should be available with the ignition Key Off.*

ECM Connected

1 Backprobe ECM pin No 18, the voltmeter should indicate nbv.

ECM Disconnected

2 Attach the negative voltmeter probe to an ECM earth pin.

3 Attach the positive voltmeter probe to ECM pin No 18, the voltmeter should indicate nbv.

ECM Pin No 27 (All vehicles except 306)

Note: *ECM pin No 27 is connected to the ignition switch and voltage should be available with the ignition Key On. On some models the voltage from the relay passes through an immobiliser. If voltage is not available at pin No 27, check the immobiliser circuit.*

ECM Connected

1 Ignition Key On.

2 Backprobe ECM pin No 27, the voltmeter should indicate nbv.

ECM Disconnected

3 Ignition Key On.

4 Attach the negative voltmeter probe to an ECM earth pin.

5 Attach the positive voltmeter probe to ECM pin No 27, the voltmeter should indicate nbv.

ECM Pin No 37

Note: *ECM pin No 37 is connected to the main relay output and voltage should be available with the ignition Key On.*

ECM Connected

1 Ignition Key On.

2 Backprobe ECM pin No 37, the voltmeter should indicate nbv.

ECM Disconnected

3 Ignition Key On.

4 Attach the negative voltmeter probe to an ECM earth pin.

5 Attach the positive voltmeter probe to ECM pin No 37, the voltmeter should indicate nbv.

ECM Pin No 36 (Main Relay Driver)

Relay and ECM Connected

1 Ignition Key Off.

2 Backprobe pin No 36 with the voltmeter positive probe, nbv should be obtained.

3 No voltage, check the relay and the relay wiring.

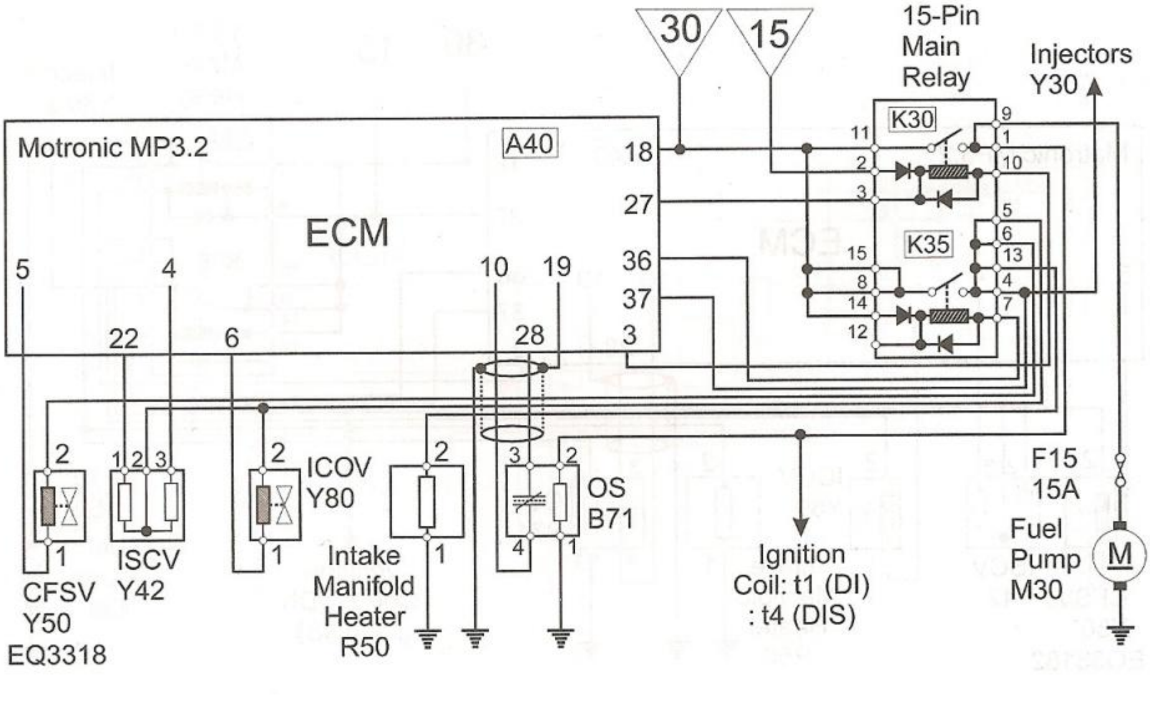

5.2 ECM/OS/ISCV/CFSV/ICOV/IMH/Relays/FP local wiring diagram (306)

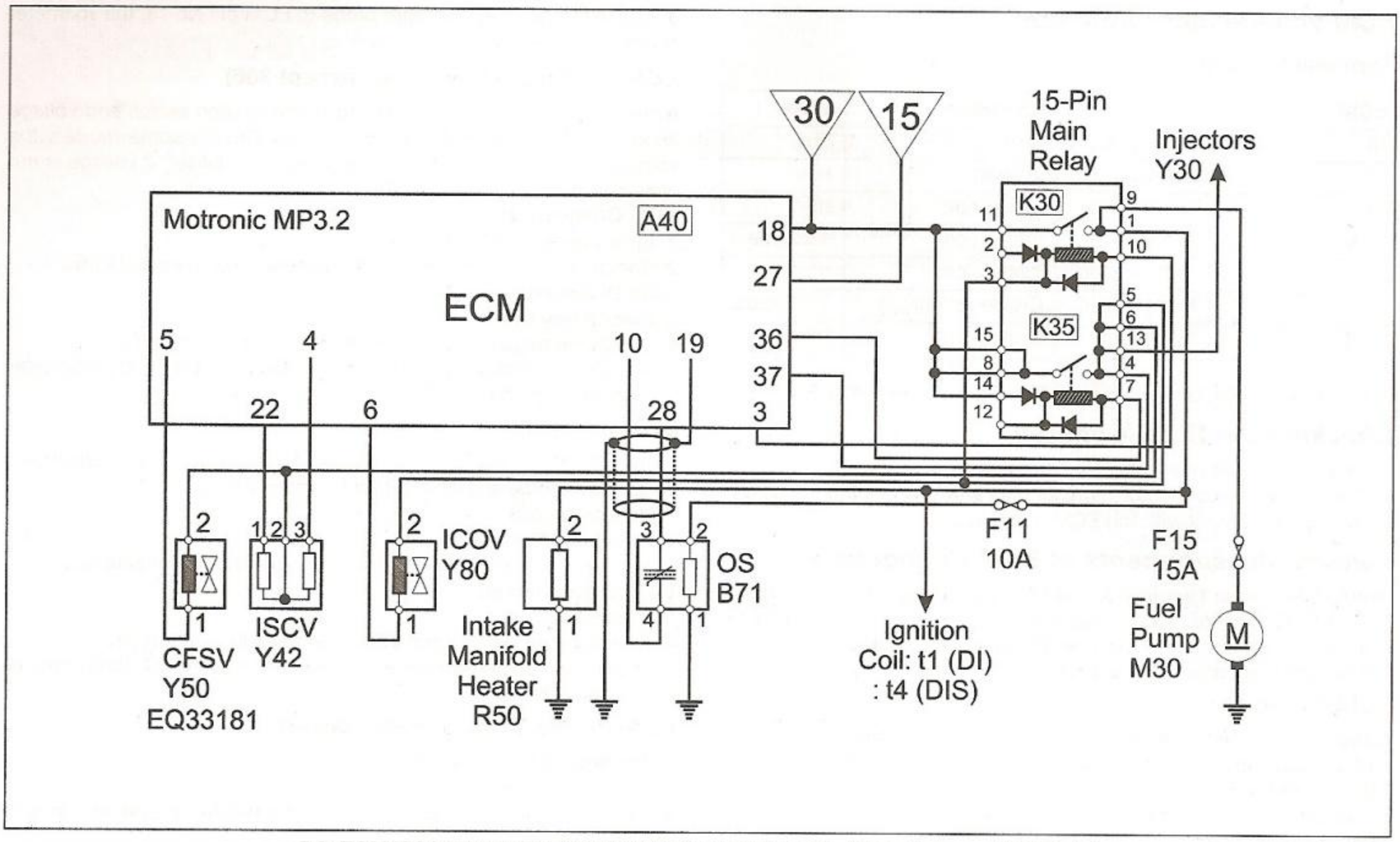

5.3 ECM/OS/ISCV/CFSV/ICOV/IMH/Relays/FP local wiring diagram (405 Early)

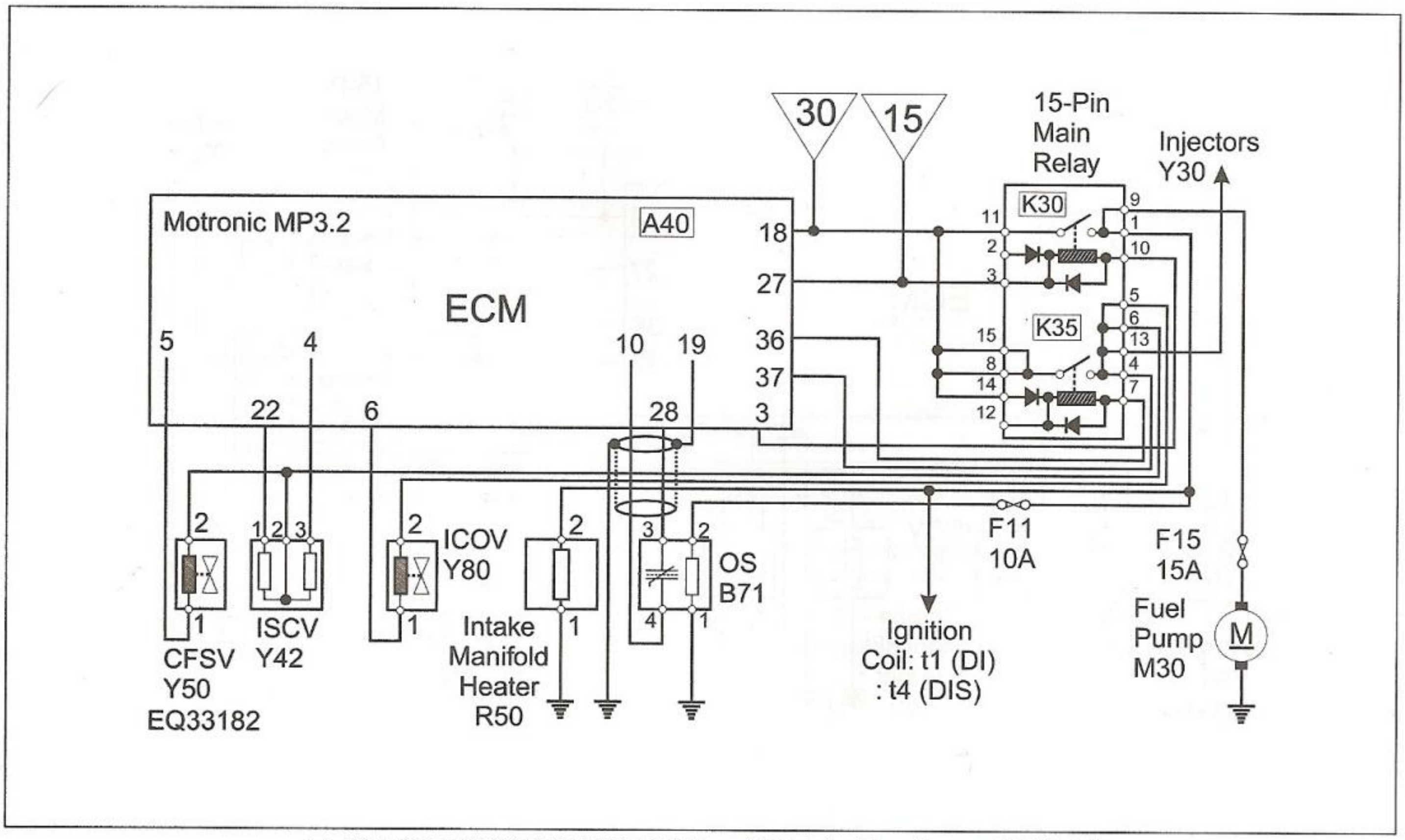

5.4 ECM/OS/ISCV/CFSV/ICOV/IMH/Relays/FP local wiring diagram (405 Late)

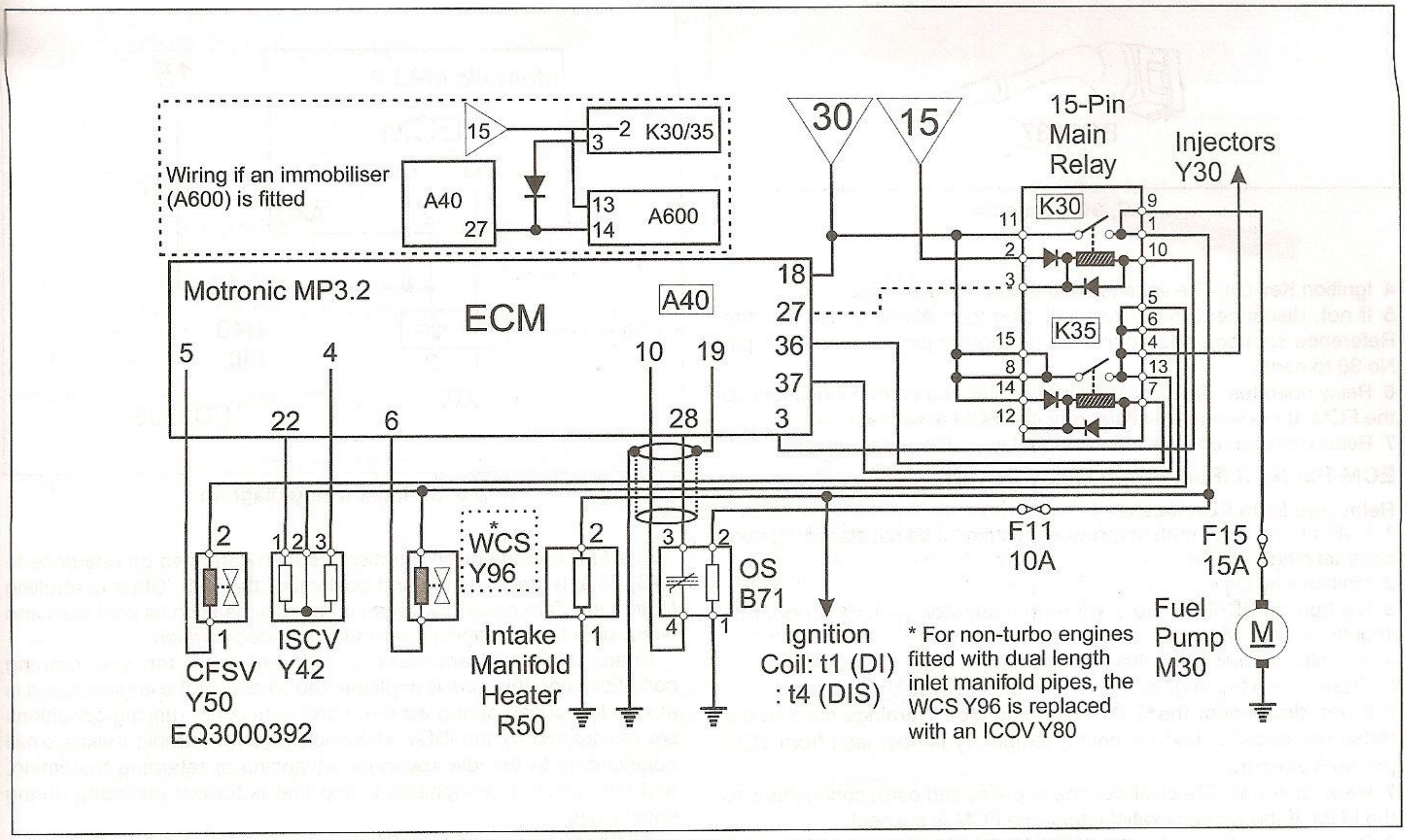

5.5 ECM/OS/ISCV/CFSV/ICOV/WCS/IMH/Relays/FP local wiring diagram (605/XM)

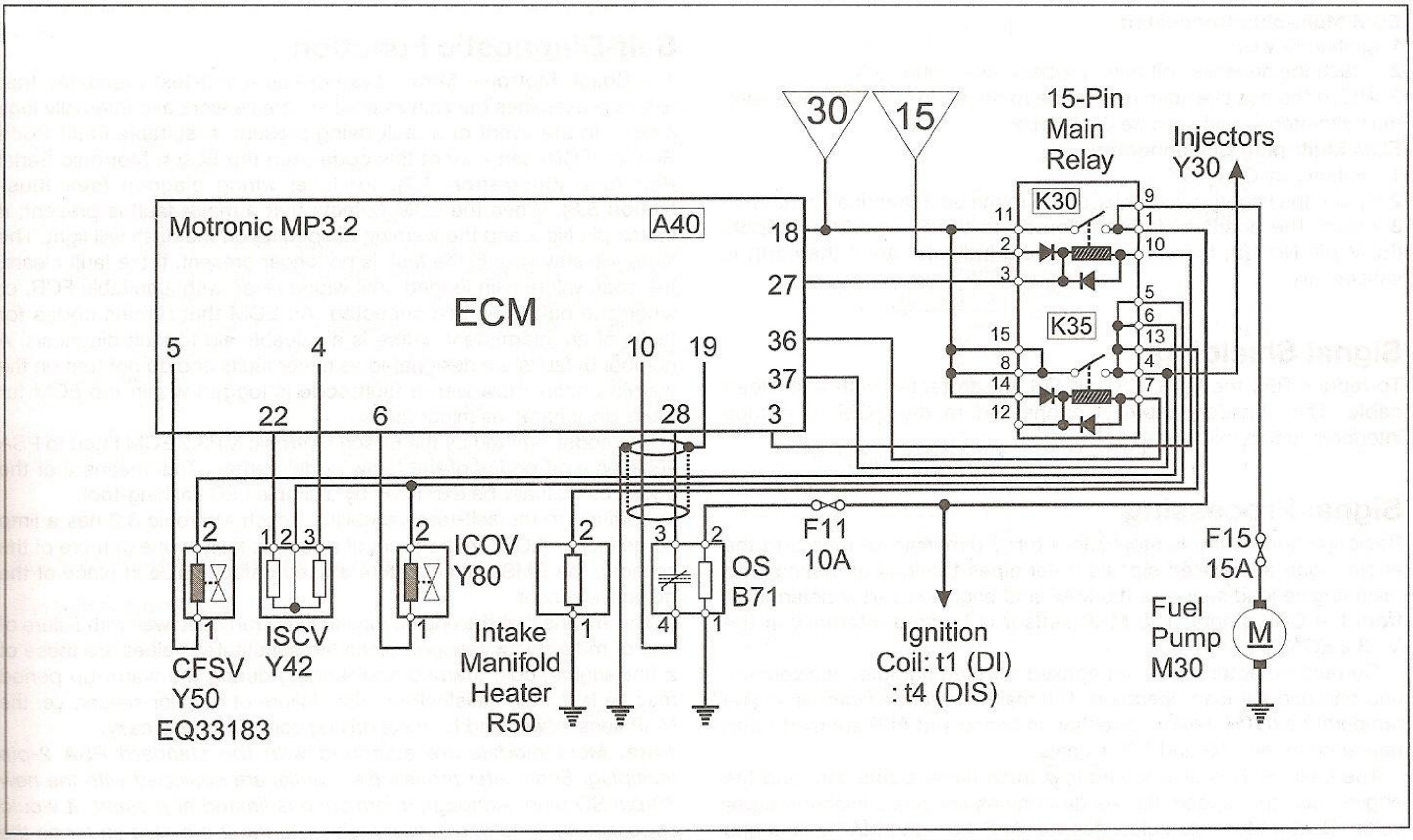

5.6 ECM/OS/ISCV/CFSV/ICOV/IMH/Relays/FP local wiring diagram (Xantia/ZX)

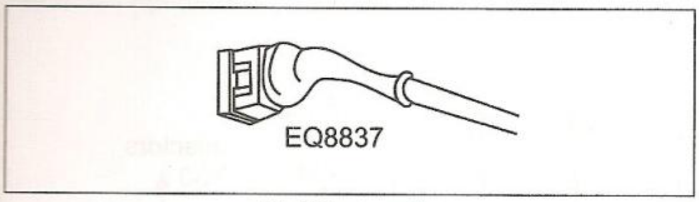

5.7 SD connector

4 Ignition Key On. The voltage should drop to near zero.

5 If not, disconnect the ECM multi-plug (see Warnings No 3 in the Reference section), and connect a temporary jumper lead from pin No 36 to earth.

6 Relay operates: Check all voltage supplies and earth connections to the ECM. If the wiring is satisfactory, the ECM is suspect.

7 Relay does not operate: check the relay and the relay wiring.

ECM Pin No 3 (Fuel Pump Relay Driver)

Relay and ECM Connected

1 ECM pin No 36 operation (previous test) must be satisfactory before commencing this test

2 Ignition Key On.

3 Backprobe ECM pin No 3 with the voltmeter positive probe, nbv should be obtained.

4 No voltage, check the relay and the relay wiring

5 Crank or run the engine, the voltage should drop to near zero

6 If not, disconnect the ECM multi-plug (see Warnings No 3 in the Reference section), and connect a temporary jumper lead from ECM pin No 3 to earth.

7 Relay operates: Check all voltage supplies and earth connections to the ECM. If the wiring is satisfactory, the ECM is suspect.

8 Relay does not operate: check the relay and the relay wiring.

ECM Earth Pin No 19, No 14, No 24 & No 47

ECM Multi-plug Connected

1 Ignition Key On

2 Attach the negative voltmeter probe to an engine earth

3 Attach the positive voltmeter probe to the earth terminal under test, the voltmeter should indicate 0.25V max.

ECM Multi-plug Disconnected

1 Ignition Key On or Off

2 Attach the negative voltmeter probe to the earth terminal under test.

3 Attach the positive voltmeter probe to the ECM battery supply (ECM pin No 18), the voltmeter should indicate nbv if the earth is satisfactory

Signal Shielding

To reduce RFI, the CAS, KS and OS are protected with a shielded cable. The shielded cable is connected to the ECM to reduce interference to a minimum.

Signal Processing

Basic ignition timing is stored in a three dimensional map and the engine load and speed signals determines the ignition timing. The main engine load sensor is the MAP and engine speed is determined from the CAS signal. The MAP sensor is located internally in the MP3.2 ECM.

Correction factors are then applied for starting, idle, deceleration and part and full-load operation. The main correction factor is engine temperature (CTS). Minor correction to timing and AFR are made with reference to the ATS and TPS signals.

The basic AFR is also stored in a three dimensional map and the engine load and speed signals determines the basic injection pulse value. Bosch Motronic calculates the AFR from the MAP signal and the speed of the engine (CAS).

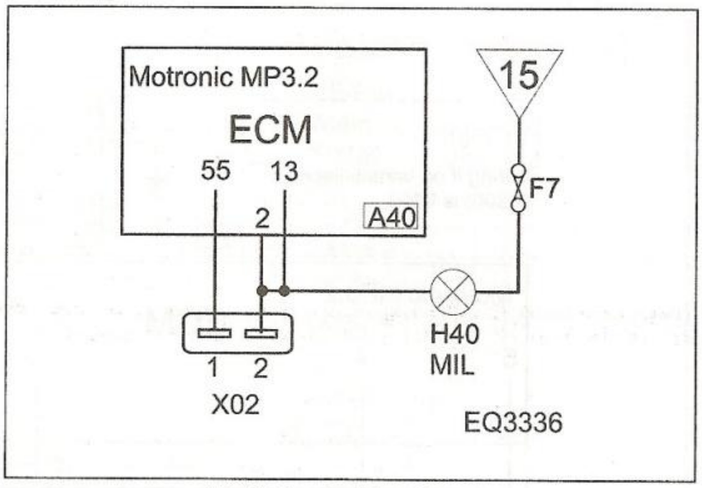

5.8 SD local wiring diagram

The AFR and the pulse duration are then corrected on reference to ATS, CTS, battery voltage and position of the TPS. Other controlling factors are determined by operating conditions such as cold start and warm-up, idle condition, acceleration and deceleration.

Bosch Motronic accesses a different map for idle running conditions and this map is implemented whenever the engine speed is at idle. Idle speed during warm-up and normal hot running conditions are maintained by the ISCV. However, Bosch Motronic makes small adjustments to the idle speed by advancing or retarding the timing, and this results in an ignition timing that is forever changing during engine idle.

At an engine speed of 6840 rpm, the ECM cuts off injector operation as a safety precaution.

Self-Diagnostic Function

The Bosch Motronic MP3.2 system has a self-test capability that regularly examines the signals from engine sensors and internally logs a code in the event of a fault being present. A suitable Fault Code Reader (FCR) can extract this code from the Bosch Motronic Serial Port **(see Illustration 5.7)**, for local wiring diagram **(see Illustration 5.8)**. When the ECM detects that a major fault is present, it earths pin No 2 and the warning lamp (MIL) on the dash will light. The lamp will stay lit until the fault is no longer present. If the fault clears, the code will remain logged until wiped clean with a suitable FCR, or when the battery is disconnected. An ECM that retains codes for faults of an intermittent nature is a valuable aid to fault diagnosis. A number of faults are designated as minor faults and do not turn on the warning lamp. However, a fault code is logged within the ECM for faults designated as minor faults.

The codes emitted by the Bosch Motronic MP3.2 ECM fitted to PSA vehicles emit codes of the 'slow code' variety. This means that the codes can usually be extracted by a simple LED flashing-tool.

In addition to the self-test capability, Bosch Motronic 3.2 has a limp home facility (LOS). In the event of a serious fault in one or more of the sensors, the EMS will substitute a fixed default value in place of the defective sensor.

This means that the engine may actually run quite well with failure of one or more minor sensors. Since the substituted values are those of a hot engine, cold starting and running during the warm-up period may be less than satisfactory. Also, failure of a major sensor, i.e. the MAP sensor, will tend to make driving conditions less easy.

Note: *Most models are equipped with the standard PSA 2-pin multiplug. Some later models (i.e. Xantia) are equipped with the new 30-pin SD plug. Although information is limited at present, it would appear to operate in a similar fashion to the 2-pin plug so far as the EMS connections and warning lamp are concerned.*

Ignition Systems

Data on load (MAP), engine speed (CAS), engine temperature (CTS) and throttle position (TPS) are collected by the ECM, which then refers to the digital map stored within its microprocessor. This map contains an advance angle for each operating condition, and thus the best ignition advance angle for a particular operating condition can be determined. The ECM looks-up the correct dwell duration and timing point and signals the amplifier – which in turn switches the coil negative terminal to achieve ignition. Bosch Motronic MP3.2 uses two types of ignition coils, either a Distributorless Ignition System (DIS) or a Direct Ignition (DI).

Distributorless Ignition System (DIS)

Although the ignition system is termed DIS, the basic operation is much the same as on models with conventional ignition. In a DIS or so called 'wasted spark' system, a double ended coil is used to fire two plugs at the same time. This means that the system can only be used where two cylinders rise and fall together.

One cylinder will fire on the compression stroke and the companion cylinder will fire on the exhaust stroke where the spark is 'wasted'. Two pairs of coils will therefore be required for a four-cylinder engine. About 3 kV is still needed to fire the 'wasted spark' plug, but this is far less than that required to bridge the rotor gap. Each ignition coil receives a voltage supply from the ignition switch and a separate dwell connection to the amplifier. In addition, separate connections for each coil are made between the ECM and the amplifier. In effect, the ECM and amplifier contains two separate circuits so that each coil can be switched individually and alternately.

Direct Ignition (DI)

Unlike DIS, which fire two spark plugs together, some models utilises two amplifiers and four ignition coils to fire each sparkplug in engine firing order as the piston approaches TDC on the compression stroke. Thus the ignition operating sequence is: the CAS signals the ECM when cylinder No 1 or No 4 is at TDC and to identify cylinder No 1 the CMP signals the ECM as well. With this information the ECM can trigger the appropriate amplifier and thus the appropriate ignition coil to provide the correctly timed spark.

Crank Angle Sensor (CAS)

The primary signal to initiate both ignition and fuelling emanates from a Crank Angle Sensor (CAS) **(see Illustration 5.9)** mounted in proximity to the flywheel. The CAS consists of an inductive magnet that radiates a magnetic field. A sensing ring, attached to the flywheel, comprises 60 steel pins set into the periphery at evenly spaced intervals. As the flywheel spins, and the pins are rotated in the magnetic field, an AC voltage signal is delivered to the ECM to indicate speed of rotation. Two of the sensing ring pins are omitted as a reference mark to TDC. As the flywheel spins, the two missing pins cause a variance of the signal that is returned to the ECM as reference to the TDC position.

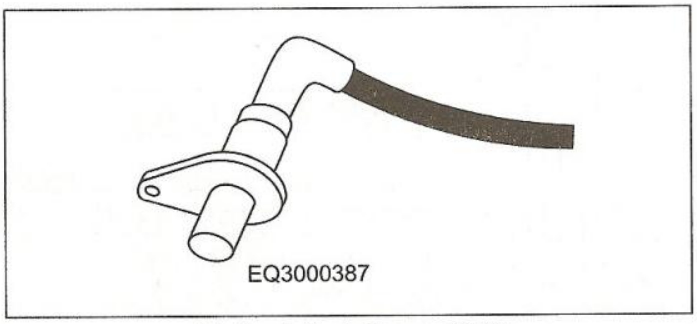

5.9 Crank Angle Sensor (CAS)

The peak to peak voltage of the speed signal (when viewed upon an oscilloscope) can vary from 5 volts at idle to over 100 volts at 6000 rpm. Because computers prefer their data as on/off signals, an analogue to digital converter (ADC) transforms the AC pulse into a digital signal.

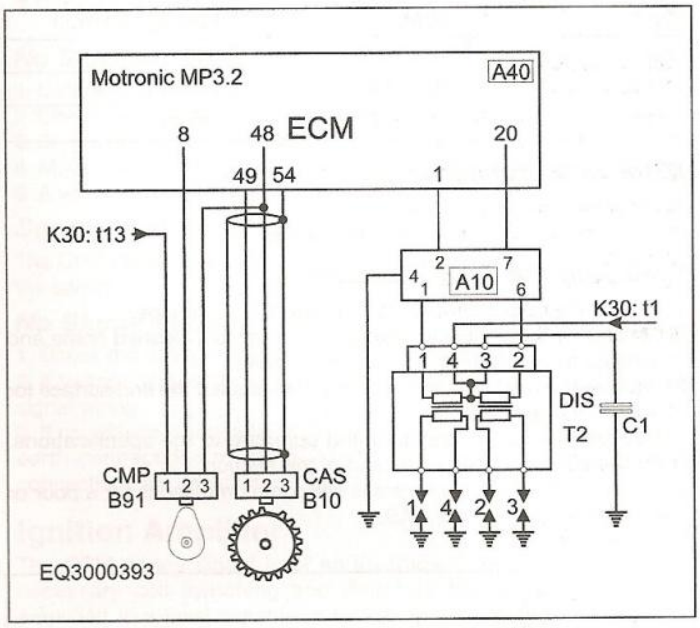

5.10 CAS/CMP/DIS Primary ignition local wiring diagram

CAS Voltage Measurements

Terminal Numbers

CAS	ECM	Item	Volts	Condition	VAC (rms)	VAC (pk to pk)
2	48	Sensor return	0.25 max			
3	54	Earth	0.25 max			
1	49	Output voltage		Cranking/idle	0.7V+	2.0V+
				Idle	4.0V+	11.0V+
				Cruise	5.0V+	14.0V+

For local wiring diagram **(see Illustration 5.10 or 5.11)**

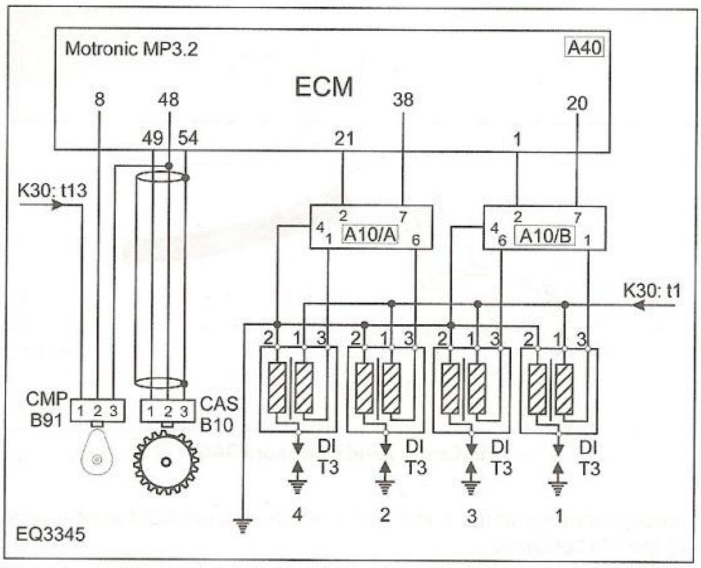

5.11 CAS/CMP/DI Primary Ignition local wiring diagram

CAS Resistance Measurements

Terminal Numbers

CAS	ECM	Res. (Ω)
1 and 2	49 and 48	300 – 400
1 and 3	49 and 47	Infinity
2 and 3	48 and 47	Infinity

External Influences

- Incorrect air gap
- Faulty or incorrectly positioned flywheel

Checking the CAS (General)

1 Inspect the CAS multi-plug for corrosion, and damage.

2 Check that the connector terminal pins are fully pushed home and making good contact with the CAS multi-plug.

3 Remove the CAS from the engine block. Inspect the end surface for corrosion and damage.

4 Measure the CAS resistance and compare to the specifications. Refer to resistance tests at the end of this section.

5 Faults in any of the above areas are common reasons for a poor or inaccurate signal from the CAS.

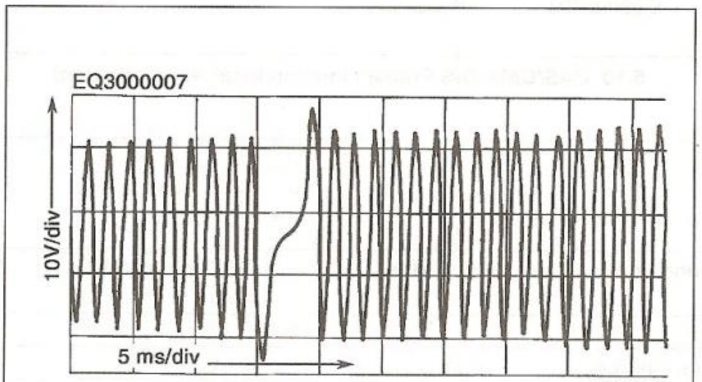

5.12 Typical CAS output signal waveform

Checking CAS Output with an Oscilloscope

Engine Cranking

Note: *This test is more likely to be made if the engine is a non-runner.*

1 Detach the CAS or ECM multi-plug.

2 Connect an oscilloscope between terminals 1 and 2 at the CAS or the corresponding multi-plug terminals at the ECM.

3 Crank the engine, a minimum of about 4.0 to 5.0 VAC pk to pk should be obtained **(see Illustration 5.12)**

Note: *In some instances, a much larger waveform than expected could also be indicative of a fault.*

4 Check for even peaks. One or more peak that is much smaller than the others would indicate a missing or damaged CAS lobe.

5 If no signal, or a very weak or intermittent signal:

- Measure the CAS resistance.
- Check the sensor for damage, dirt or oil.
- Check the flywheel for damage
- Check the CAS air gap (where possible).

Engine Running

1 Reconnect the CAS or ECM multiplug and (where possible) peel the insulating boot back in order to backprobe the CAS terminals with the voltmeter probes (OR connect a BOB between the ECM multi-plug and the ECM).

2 Better results are usually obtained by probing the + terminal although the waveform can often be obtained upon the CAS earth return.

3 Run the engine at various engine speeds and check for a consistent signal that meets the same requirements as the cranking test.

Checking CAS Output with an AC Voltmeter

Engine Cranking

Note: *This test is more likely to be made if the engine is a non-runner.*

1 Detach the CAS or ECM multi-plug and connect an AC voltmeter between the CAS terminals

2 Crank the engine. A minimum of about 0.7 VAC (rms) should be obtained, although most good sensors will provide an output of more than 1.4 VAC (rms).

Note: *The AC voltmeter at least proves that the CAS is generating a signal. However, the AC voltage is an average voltage and does not clearly indicate damage to the CAS lobes or that the sinewave is regular in formation.*

Checking CAS Output with an AC Voltmeter

Engine Running

Note: *Measuring the trigger output, with the engine running, could be a little tricky.*

1 Reconnect the multiplug and peel the insulating boot back (where possible), in order to backprobe the sensor terminals with the voltmeter probes.

2 Start the engine and allow it to idle. The VAC (rms) could be displayed at various engine speeds by regulating the throttle.

Note: *It is quite possible (even probable) that the engine will not start with the voltmeter connected. Alternatively, if the voltmeter is attached with the engine running it might stall or even misfire as the throttle is opened. This is because a small amount of current is robbed from the circuit to drive the meter, and this could be enough to cause the engine to misfire or stall.*

3 First run the engine at 2000 rpm and then attach the meter probes, the greater voltage output at this speed is usually sufficient to enable the engine to continue running. No damage will result to the engine so long as the voltmeter meets the correct specification (See Warnings No 5 in the Reference section).

Checking CAS Resistance with an Ohmmeter

1 Detach the CAS or ECM multi-plug and connect an ohmmeter between the two terminals leading to the sensor.

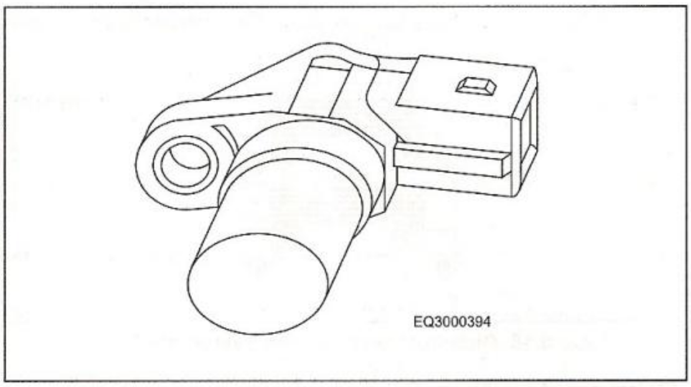

5.13 Camshaft Position (CMP) Hall Effect Sensor

2 Record the resistance and compare it with the CAS resistance measurements.

Note: *Even if the resistance is within the quoted specifications, this does not prove that the CAS can generate an acceptable signal.*

CAS Shield Connection

1 The CAS may have a shield wire (not in all cases). Locate the wiring multi-plug connector or disconnect the ECM multi-plug.

2 Attach an ohmmeter probe to one of the sensor terminals No 1 or No 2.

3 Attach the other ohmmeter probe to the shield wire terminal. A reading of infinity should be obtained.

4 Move the ohmmeter probe from the shield wire terminal and connect it to earth. A reading of infinity should also be obtained.

Note: *The shield wire on the CAS in some systems is connected to the CAS earth return wire. In such a case continuity will be registered on the ohmmeter and this is normal for that vehicle. Refer to the wiring diagrams for the system under test to determine how the CAS is wired.*

Camshaft Position (CMP) sensor

In order that the ignition and injection may be timed with the correct cylinder, a sensor is required to pinpoint No 1 cylinder. In the MP3.2 system, this sensor uses the Hall Effect principle to generate a signal. The Camshaft Position (CMP) sensor **(see Illustration 5.13)** is located adjacent to No 1 cylinder. A peg is located on the inlet camshaft so that it is opposite the CMP sensor when No 1 cylinder is in the TDC position. A voltage supply is applied to the Hall sensor from the main relay and the sensor is earthed through the CAS return. A third wire is connected to the Bosch Motronic ECM. As the engine rotates and the peg on the camshaft passes the sensor a signal is returned to the ECM, which signals the position of No 1 cylinder. Once the ECM has identified No 1 cylinder, the correct ignition timing and injection pulse for each individual cylinder can be initiated at the correct moment.

CMP Voltage Measurements

Terminal Numbers

CMP	ECM	Item	Volts
Ignition on			
1	—	nbv	
		(Relay: t6 306 models: t4 405 models: t13 ZX, Xantia models)	nbv
Engine running			
2	8	Signal voltage	5.0 approx.
3	48	Sensor return	0.25 max

For local wiring diagram **(see Illustration 5.10 or 5.11)**

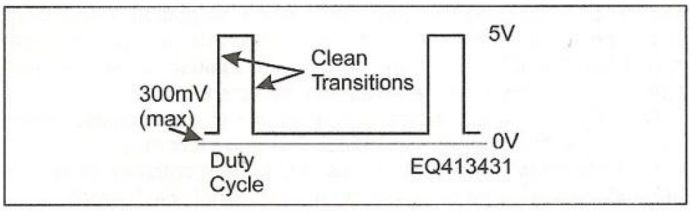

5.14 Typical CMP output signal waveform

Checking the CMP Sensor (General)

1 Inspect the CMP sensor multi-plug for corrosion, and damage

2 Check that the terminal pins are fully pushed home and making good contact with the CMP multiplug.

Checking CMP Sensor Operation

1 Testing is quite straightforward. The three wires to the connector are supply, earth and signal.

2 Backprobe the CMP sensor multi-plug OR connect a BOB between the ECM multi-plug and the ECM.

3 Connect the negative probe of an oscilloscope, dwell meter or voltmeter to an engine earth.

4 Connect the positive probe of the oscilloscope, dwell meter or voltmeter to the wire attached to the CMP sensor signal terminal.

Checking for a CMP Sensor Signal

- Run the engine at idle and check for an output signal **(see Illustration 5.14)**

No Signal or an Erratic Signal, Duty Cycle or Voltage

1 CMP sensor multi-plug disconnected and the ignition on.

2 Check for a voltage supply to the CMP sensor supply terminal.

3 Check the earth connection at the CMP sensor earth terminal.

4 Move the voltmeter positive probe to the signal.

5 A voltage of about 5.0 volts should be obtained.

Supply and Earth Voltages OK

The CMP sensor is suspect or the CMP sensor is not being rotated by the camshaft.

No Signal Voltage

1 Check the voltage at the ECM multiplug terminal.

2 If voltage is satisfactory at the ECM, check the continuity of the signal wiring.

3 If no voltage is available at the ECM, check all voltage supplies and earth connections to the ECM. If the voltage supplies and earth connections are satisfactory, the ECM is suspect.

Ignition Amplifier

The ECM timing signal is of an insufficient level to complete the necessary coil switching and therefore the signal needs to be amplified to a level capable of switching the coil negative terminal. The ignition amplifier **(see Illustration 5.15)** contains the circuitry for

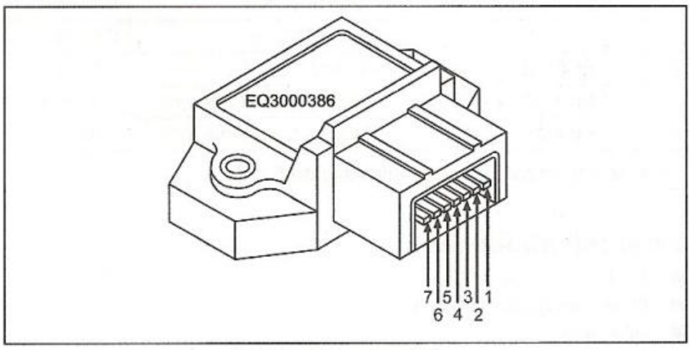

5.15 Ignition Amplifier

switching the coil negative terminal to instigate ignition. Depending upon the model the ignition utilises either one or two separate amplifiers. The ECM calculates the correct ignition dwell time and timing advance from data received from its sensors.

For DIS, two signals are sent in sequence to an amplifier, which then switches the appropriate DIS coil's negative terminal,

For DI the ECM sends four signals, two to each amplifier, to switch the appropriate cylinder coil's negative terminal. Each amplifier is switched twice per engine cycle and each amplifier switches two coils. Amplifier A switches coils No 2 and No 4 and then Amplifier B switches coil No 1 and No 3

Ignition dwell

Dwell operation in Bosch Motronic is based upon the principle of the 'constant energy current limiting' system. This means that the dwell period remains constant at around 4.0 to 5.0 ms, at virtually all engine running speeds. However, the dwell duty cycle, when measured in percent or degrees, will vary as the engine speed varies.

DIS Amplifier Voltage Measurements

Terminal Numbers

Amp.	Component	Item	Volts
Relay by-passed			
6	Ignition coil: t2	Voltage	nbv
1	Ignition coil: t1	Voltage	nbv
Engine cranking/running			
4	—	Earth	0.25 max
2	ECM: t1	Control signal	0 to nbv
7	ECM: t20	Control signal	0 to nbv
1	Ignition coil: t1	Primary switching wire	200 min
6	Ignition coil: t20	Primary switching wire	200 min

For local wiring diagram **(see Illustration 5.10)**

DI Amplifier Voltage Measurements (Amplifiers A and B)

Terminal Numbers

Amp.	Component	Item	Volts
Ignition on (Ignition amplifier multiplug disconnected)			
1	Ignition coil: t3	Voltage	nbv
6	Ignition coil: t3	Voltage	nbv
Engine running			
4	—	Earth	0.25 max
2	ECM: t21	Control signal	0 to nbv
7	ECM: t38	Control signal	0 to nbv
2	ECM: t1	Control signal	0 to nbv
7	ECM: t20	Control signal	0 to nbv
1	Ignition coil: t3	Primary switching wire	200 min
6	Ignition coil: t3	Primary switching wire	200 min

For local wiring diagram **(see Illustration 5.11)**

External Influences

- Ignition system fault
- Defective ignition switch
- Alternator
- Voltage regulator or distributor

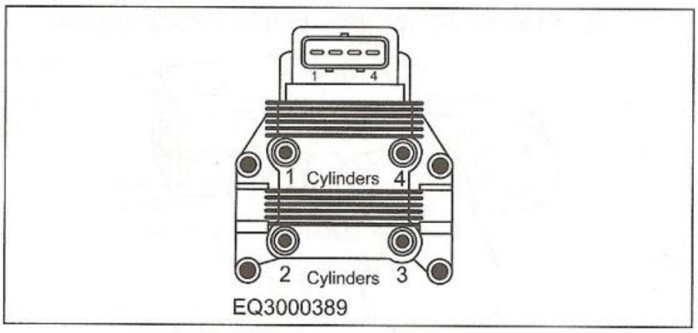

5.16 Distributorless Ignition System Coil

Primary Ignition Distributorless Ignition System (DIS) Coil

Although the ignition system is termed DIS, the basic operation is much the same as on models with conventional ignition. In a DIS **(see Illustration 5.16)** or so-called 'wasted spark' system, a double-ended coil is used to fire two plugs at the same time. This means that the system can only be used where two cylinders rise and fall together.

One cylinder will fire on the compression stroke and the companion cylinder will fire on the exhaust stroke where the spark is 'wasted'. Two pairs of coils will therefore be required for a four-cylinder engine. About 3 kV is still needed to fire the 'wasted spark' plug, but this is far less than that required to bridge the rotor gap. Each ignition coil receives a voltage supply from the ignition switch and a separate dwell connection to the amplifier. In addition, separate connections for each coil are made between the ECM and the amplifier. In effect the ECM and amplifier contains two separate circuits so that each coil can be switched individually and alternately.

The ignition coils utilises low primary resistance in order to increase primary current and primary energy. The amplifier limits the primary current to around 8 amps and this permits a reserve of energy to maintain the required spark burn time (duration).

Ignition timing

The ignition timing is not adjustable on models equipped with Bosch Motronic MP3.2.

Ignition Primary Voltage Measurements

Terminal Numbers

Coil	Amp	Item	Volts
Engine cranking or running			
4	—	Supply voltage from FI relay: t9	nbv
1	1	Primary switching wire	nbv
1	1	Dynamic volt drop	2.0 max
2	6	Primary switching wire	200 min
2	6	Dynamic volt drop	2.0 max
3	—	Suppressor	nbv

For local wiring diagram **(see Illustration 5.10)**

Ignition Primary Resistance Measurements

Terminal Numbers

Coil	Item	Res. (Ω)
1 and 3	Primary resistance (1 & 4)	0.8
2 and 3	Primary resistance (2 & 3)	0.8
1-4 and 4-1	Secondary resistance	8.6k Valeo
		14.6 Bosch
2-3 and 3-2	Secondary resistance	8.6k Valeo
		14.6 Bosch

Ignition Primary Duty Cycle Table

RPM	Duty Cycle %	ms
Cranking	15 – 30	15.0 – 20.0
1000 rpm	5 – 20	5.0 – 6.0
2000 rpm	25 – 35	5.0 – 6.0
3000 rpm	30 – 40	5.0 – 6.0

Primary Ignition Testing (General)

1 Check the coil terminals for good clean connections.

2 Clean away accumulations of dirt and the residue from the DIS coil pack using a maintenance spray. The residue will attract dirt, and often leads to bleeding of the HT current to earth.

3 Inspect the coil for signs of tracking, particularly around the coil tower area.

4 Connect the negative oscilloscope or dwell meter probe to an engine earth.

5 Connect the positive oscilloscope or dwell meter probe to one of the two coil negative (-) terminals No 1 or No 2.

6 The ignition system for Bosch Motronic MP3.2 (DIS) can be divided into two separate circuits. Each separate circuit consists of a double ended coil (to fire two spark plugs), an amplifier output signal and a timing reference control signal from the ECM to the amplifier. Each circuit should be tested individually.

7 After making tests upon one coil and its connections to the amplifier and ECM, repeat the tests upon the other coil circuit.

Engine Non-runner Tests

1 Coil No 1 is connected to cylinders No 1 and No 4.

2 Coil No 2 is connected to cylinders No 2 and No 3.

3 Connect the oscilloscope or dwell meter to coil terminal No 1 (coil No 1).

4 Crank the engine and record the results **(see Illustration 5.17)**

5 Connect the oscilloscope or dwell meter to coil terminal No 2 (coil No 2).

6 Crank the engine and record the results **(see Illustration 5.17)**

7 Either a primary waveform or a duty cycle reading should be obtained on both circuits. If the instrument can measure the value in milliseconds, then this is even more useful.

Oscilloscope

In addition to a well-defined waveform, the primary voltage peaks should be a minimum of 300 volts.

Analysis

1 Good primary waveform or signal on both coils:

- The primary ignition (including the CAS) is providing an acceptable signal. The fault is not related to the ignition primary circuit.

Poor Primary Waveform or Signal on Both Coils

1 Poor signal on both coils: Check the CAS for a good signal to the ECM.

2 Continue with the following tests on both coils.

Poor Primary Waveform or Signal on Coil No 1

1 Connect the oscilloscope or voltmeter to coil positive (+) terminal No 3.

2 Crank the engine or by-pass the relay.

3 Check for nbv. This voltage is supplied from the FI relay during engine cranking or running.

4 By-pass the relay and check for voltage to the coil negative (-) terminal No 1. Coil terminal No 1 is connected to the amplifier terminal No 1.

5 No voltage, remove the wire to the coil (-) terminal and recheck.

6 Still no voltage, check the primary resistance for coil No 1.

7 Voltage at nbv level, check for a short to earth between coil terminal No 1 and amplifier terminal No 1.

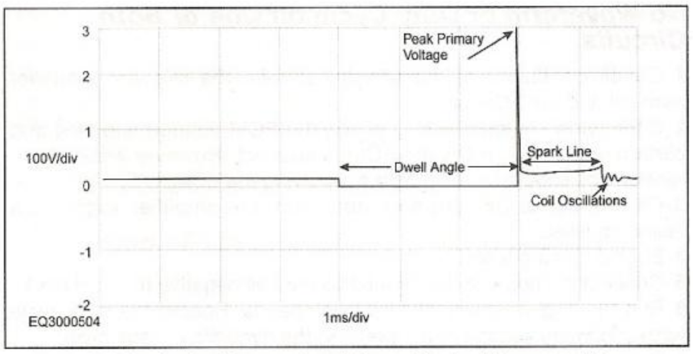

5.17 Typical primary signal from the ignition amplifier

Poor Primary Waveform or Signal on Coil No 2

1 Connect the oscilloscope or voltmeter to coil positive (+) terminal No 3.

2 Crank the engine or by-pass the relay.

3 Check for nbv. This voltage is supplied from the FI relay during engine cranking or running.

4 By-pass the relay and check for voltage to the coil negative (-) terminal No 2. Coil terminal No 2 is connected to the amplifier terminal No 6.

5 No voltage, remove the wire to the coil (-) terminal and recheck.

6 Still no voltage, check the primary resistance for coil No 2.

7 Voltage at nbv level, check for a short to earth between coil terminal No 2 and amplifier terminal No 6.

Control Signal Tests

1 Peel back the insulating boot to the ignition amplifier and connect the positive oscilloscope or dwell meter probe to terminal No 2.

Note: *If a BOB is available, the tests could be carried out at the ECM pins.*

2 Crank the engine. Either a square waveform control signal **(see Illustration 5.18)** or a duty cycle reading should be obtained.

3 Reconnect the positive oscilloscope or dwell meter probe to terminal No 7.

4 Crank the engine. Either a square waveform control signal or a duty cycle reading should be obtained.

5 If a signal is not obtained at one or the other of the amplifier terminals, make the following checks.

6 Switch off the ignition and remove the ECM and amplifier multiplug (see Warnings No 3 in the Reference section).

7 Check for continuity between ECM pin No 1 and amplifier terminal No 2.

8 Check for continuity between ECM pin No 20 and amplifier terminal No 7.

9 Check the earth connection at amplifier terminal No 4.

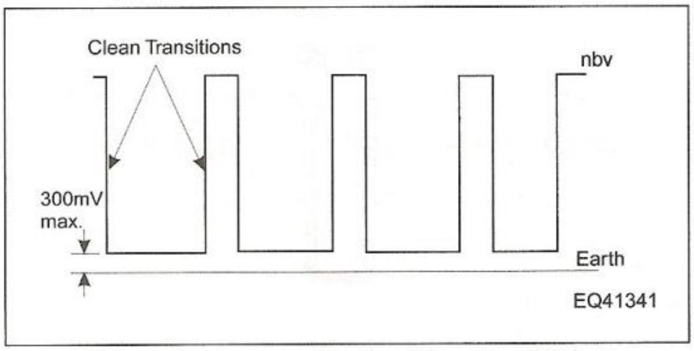

5.18 Typical primary ignition signal from the ECM to the ignition amplifier

No Waveform or Duty Cycle on One or Both Circuits

1 Check continuity of the wiring between the relevant amplifier terminal and the ECM pin.

2 If the wiring is satisfactory check the ECM voltage supplies and earth connections, if OK the ECM is suspect. However a substitute ignition coil should be tried before renewing the ECM.

3 Control signal OK, but no output from the amplifier suggests a faulty amplifier.

4 Engine running tests

5 Connect a 'scope or dwell meter to the coil negative terminal No 1.

6 Run the engine at idle and various speeds. Record the duty cycle values, primary voltage peak level and the dynamic voltage drop.

7 Compare the results with the specified figures.

8 Connect the 'scope or dwell meter to the coil negative terminal No 2.

9 Repeat the above tests and record the values.

10 Compare the results with the specified figures and also with the values obtained at coil negative terminal No 1.

11 If the two sets of figures are not identical check the primary resistances for coils No 1 and No 2. Widely different resistances could be responsible for widely different duty cycle values. If the primary resistances are similar, the ignition amplifier module may be suspect.

Note: *The quoted duty cycle figures are for guidance only and do vary between different vehicles of the same model. However, the readings in ms should be more reliable.*

12 It is important that the duty cycle in % increases in value for each coil as the engine rpm is raised.

13 It is important that the duty cycle in ms does not change much in value for each coil as the engine rpm is raised.

14 If the dynamic voltage drop is high (usually over 2.5 volts) coupled with a low primary voltage peak and a high dwell % (at idle), then make the module volt-drop checks. The set of conditions listed above could result in poor starting and a misfire under load.

Caution: If the dynamic voltage drop is high (usually over 2.5 volts) but the primary voltage peak and dwell % values are OK, then the amplifier is probably satisfactory

Warning: Renewing an amplifier just because the dynamic voltage drop is too high may not result in a better reading with a new amplifier.

Module Volt-drop Checks

1 Check the amplifier earth.

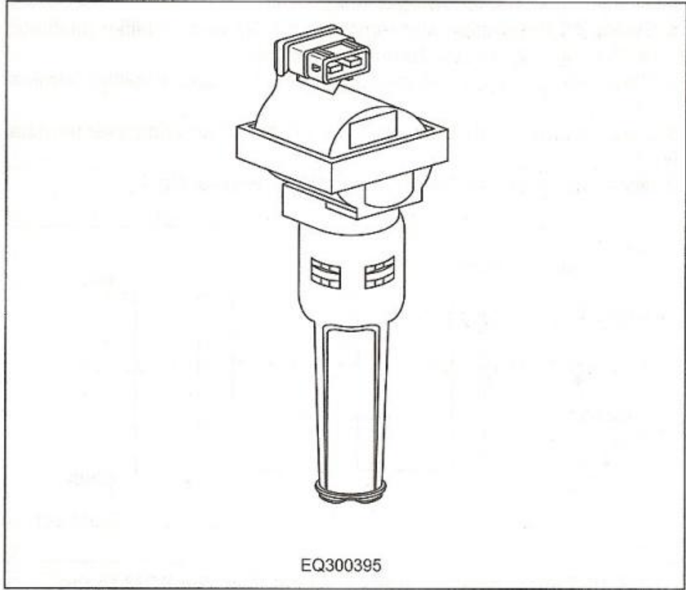

5.19 Direct Ignition Coils

2 Check that wiring connections from devices such as a radio suppressor or a burglar alarm have not been fitted to one of the coil primary (-) terminals.

3 If the earth and the wiring are satisfactory yet the primary peak voltage and the dwell % at idle are particularly high, the amplifier is suspect. Refer to the warning above before renewing the amplifier.

Primary Ignition Direct Ignition (DI) Coil

The ignition coils **(see Illustration 5.19)** utilises low primary resistance in order to increase primary current and primary energy. The amplifier limits the primary current to around 8 amps and this permits a reserve of energy to maintain the required spark burn time (duration).Ignition timing

The ignition timing is not adjustable on models equipped with Bosch Motronic MP3.2.

Ignition Primary Voltage Measurements (Both)

Terminal Numbers

Coil	Amp	Item	Volts
Cranking/running or by-pass the relay			
1	—	Supply voltage from FI relay: t1	nbv
3	1	Primary switching wire	200 min
3	6	Primary switching wire	200 min
3	1	Dynamic volt drop	2.0 max
3	6	Dynamic volt drop	2.0 max
2	4	Earth	0.25 max

For local wiring diagram **(see Illustration 5.11)**

Ignition Primary Resistance Measurements

Terminal Numbers

Coil	Item	Res (Ω)
1 and 3	Primary res.	0.65
15 and 2	Secondary res.	Note

Note: *The secondary coil circuit is connected in series with a diode and it is impossible, therefore, to make continuity or resistance checks.*

Ignition Primary Duty Cycle Table

RPM	Duty Cycle %	ms
Cranking	15 – 30	15.0 – 20.0
1000 rpm	5 – 20	4.0 – 6.0
2000 rpm	25 – 35	4.0 – 6.0
3000 rpm	30 – 40	4.0 – 6.0

Primary Ignition Testing (General)

1 This distributorless ignition system features twin amplifiers and four coils (one per spark plug).

2 Although fairly complex, if the system is systematically broken down into separate circuits, testing should be much simplified. The ignition for each cylinder should be tested individually.

3 Remove the eight screws and detach the cover shielding the ignition coils and spark plugs.

4 Check all of the four coil multiplug terminals for good clean connections.

5 Unscrew the round multiplug in the wiring loom to the rear of the cylinder head and check for good clean connections in the wiring connector to the ignition coils.

Engine Non-runner Tests

- Connect the negative oscilloscope or dwell meter probe to an engine earth.

Note: *The following test is the same for both coils of both ignition amplifiers, therefore the test procedure will only be shown once and amplifier A or B and coils 1, 2, 3 or 4 will have to be substituted in the test procedure as required. Amplifier A controls coils 4 & 2, Amplifier B controls coils 1 & 3.*

Test Amplifier A or B, Coils No 1, No 2, No 3 or No 4

Primary Ignition Tests: Amplifier A or B, Coils No 1, No 2, No 3 or No 4

1 Peel back the insulating boot to Amplifier A or B and connect the positive oscilloscope or dwell meter probe to terminal No 1 or No 6.
2 Crank the engine.
3 Either a primary waveform or a duty cycle reading should be obtained. If the instrument can measure the value in milliseconds, then this is even more useful.

Oscilloscope

In addition to a well-defined waveform, the primary voltage peak should be a minimum of 300 volts **(see Illustration 5.17)**
4 A peak less than 300V could be due to defective coil primary windings.
5 Good primary waveform or signal: The primary ignition (including the CAS) is providing an acceptable signal. The fault is not related to the ignition primary circuit under test. However, if there is no coil secondary output, the coil may still be defective.

Poor Primary Waveform or Signal

6 Check the CAS for a good signal.
7 Since voltage is only available to the ignition coils during engine cranking and running, it is necessary to by-pass the relay to provide a voltage for test purposes.
8 Switch off the ignition (See Warnings No 3 in the Reference section).
9 Detach the multiplug from the ignition amplifier.
10 Probe amplifier No 1 for nbv. If voltage is obtained, the circuit through the coil is satisfactory.

No Voltage at Coil Terminal No 1

11 Peel back the coil insulating boot and check for voltage to the coil negative terminal No 3 on coil No 4.
12 If voltage is now available, check the wire from the amplifier to the coil for continuity.
13 If voltage is still not available, check for voltage to the coil positive terminal No 1 on coil No 4.
14 If voltage is now available, check the coil primary resistance.
15 If voltage is still not available, check the supply from the fuel injection relay.

Control Signal Tests – Amplifiers A & B

10 Peel back the insulating boot to amplifier A or B and connect the positive oscilloscope or dwell meter probe to terminal No 2.
Note: *If a BOB is available, the tests could be carried out at the ECM pins.*
11 Crank the engine. Either a square waveform control signal **(see Illustration 5.18)** or a duty cycle reading should be obtained.
12 Reconnect the positive oscilloscope or dwell meter probe to terminal No 7.
13 Crank the engine. Either a square waveform control signal or a duty cycle reading should be obtained.
14 If a signal is not obtained at one or the other of the amplifier terminals, make the following checks.
15 Switch off the ignition and remove the ECM and amplifier multiplug (see Warnings No 3 in the Reference section).
16 Check for continuity between ECM pin No 21 and amplifier A terminal No 2.
17 Check for continuity between ECM pin No 38 and amplifier A terminal No 7.
18 Check for continuity between ECM pin No 1 and amplifier B terminal No 2.
19 Check for continuity between ECM pin No 20 and amplifier B terminal No 7.
20 Check the earth connection at amplifier terminal No 4.

Evaluation of Test Results

1 If the control signals are obtained, but there is no primary signal, the amplifier is suspect.
2 If the control signals are not obtained and the wiring is satisfactory, check the ECM voltage supplies and earth connections. If ok, the ECM is suspect.
3 If the control signals and primary signals are obtained, but there is no coil secondary output, the relevant coil is suspect.

Engine Running Tests

1 Connect in turn a 'scope or dwell meter to the amplifier terminals No 1 and No 6 on first Amplifier A and then Amplifier B.
2 Run the engine at idle and various speeds. Record the duty cycle values, primary voltage peak level and the dynamic voltage drop for each coil. Four sets of reading should be obtained.
3 Compare the results with the specified figures. Please note that the quoted duty cycle figures are for guidance only and do vary between different vehicles of the same model. However, the readings in ms should be more reliable.
4 All four sets of figures should give similar results.
5 It is important that the duty cycle in % increases in value as the engine rpm is raised.
6 It is important that the duty cycle in ms does not change much in value as the engine rpm is raised.
7 If the dynamic voltage drop is high (usually over 2.5 volts) coupled with a low primary voltage peak and a high dwell % (at idle), then make the module volt drop checks. The set of conditions listed above could result in poor starting and a misfire under load.

Caution: If the dynamic voltage drop is high (usually over 2.5 volts) but the primary voltage peak and dwell % values are OK, then the amplifier is probably satisfactory.

Warning: Renewing an amplifier just because the dynamic voltage drop is too high may not result in a better reading with a new amplifier.

Module Volt-drop Checks

1 Check the amplifier earth.
2 Check that wiring connections from devices such as a radio suppressor or a burglar alarm have not been fitted to the coil primary (-) terminal.
3 If the earth and wiring are satisfactory, yet the primary peak voltage and the dwell % at idle are particularly high, then the amplifier is definitely suspect. Refer to the caution above before renewing the amplifier.

Secondary Ignition

Secondary Ignition (DI) Voltage Measurements

Condition	Measurement
Firing kV (idle)	8 to 20 kV
Firing kV (1500)	8 to 15 kV (max 4 kV between highest and lowest cylinder)
Rotor kV	Not applicable
Snap Acceleration kV	+8 kV (From steady rpm measuring speed)
Spark duration	1.3 to 1.5 ms (Good plugs & ignition)

Secondary Resistance Measurements

Component	Res. (Ω)
HT lead	Not applicable
Rotor	Not applicable
Secondary	Note

Spark plugs

Model	Spark plug	Gap
Citroen ZX, Xantia 2.0i	Champion RC7YCC	0.80 ± 0.05 mm
16v cat 1992 to 1996		
Peugeot 306, 405 2.0i S	Champion RC7YCC	0.80 ± 0.05 mm
16v cat 1994 to 1996		

For details on testing secondary ignition circuits see Chapter 3

Engine Timing

No of cylinders	Rotation	Firing order
4	Anti-clockwise	1-3-4-2

Base Timing Table

Model	Year	RPM	Timing (BTDC)
306 2.0i 16v	94 – 96	850	Not stated
405 2.0i 16v cat	92 – 95	880	Not stated
Xantia 2.0i 16v cat	93 – 95	880	Not stated
ZX 2.0i 16v cat	93 – 95	880	Not stated
ZX 2.0 turbo	94 – 98	800 ± 50	Not stated
606 2.0 turbo	94 – 98	800 ± 50	Not stated

Advance Timing Table (Does not include base value)

Model	Year	RPM	Timing (BTDC)
306 2.0i 16v	94 – 96		Not stated
405 2.0i 16v cat	92 – 95		Not stated
Xantia 2.0i 16v cat	93 – 95		Not stated
ZX 2.0i 16v cat	93 – 95		Not stated
XM 2.0 turbo	94 – 98		Not stated
606 2.0 turbo	94 – 98		Not stated

Sensors

Air Temperature and Coolant Temperature Sensors (ATS & CTS)

The Air Temperature Sensor (ATS) **(see Illustration 5.20)** is mounted in the air intake where it measures the air temperature flowing into the engine. Because the density of air varies in inverse proportion to the temperature, the ATS signal allows more accurate assessment of the volume of air entering the engine. This signal is approximately 2.0 to 3.0 volts at an ambient temperature of 20°C and reduces to about 1.5 volt as the temperature rises to around 40°C

The Coolant Temperature Sensor (CTS) **(see Illustration 5.21)** is immersed in the coolant system and measures the temperature of the engine coolant.

The open circuit supply to the sensors is at a 5.0 volt reference level and the earth path is through the sensor return. Both sensors operate on the Negative Temperature Coefficient (NTC) principle. A variable voltage signal is returned to the ECM based upon the air and coolant temperatures.

ATS and CTS Voltage and Resistance Measurements

Terminal Numbers

ATS	CTS	ECM	Item	Temp (°C)	Res. (Ω)	Volts
Ignition on/ running						
2		44	Supply voltage			5.0 ± 0.1
1		26	Sensor return			0.25 (max)
2		44	Signal voltage	20		2.0 to 3.0
				40		1.5
					Open circuit	5.0 ± 0.1
					Short to earth	Zero
	2	45	Supply voltage			5.0 ± 0.1
	1	26	Sensor return			0.25 (max)
	2	45	Signal voltage	0	5.95 – 6.46 k	
				20	2.2 – 2.7 k	3.0 to 3.5
				50	760 – 910	2.5
				80	290 – 370	1.0 to 1.3
					Open circuit	5.0 ± 0.1
					Short to earth	Zero

For local wiring diagram **(see Illustration 5.22)**

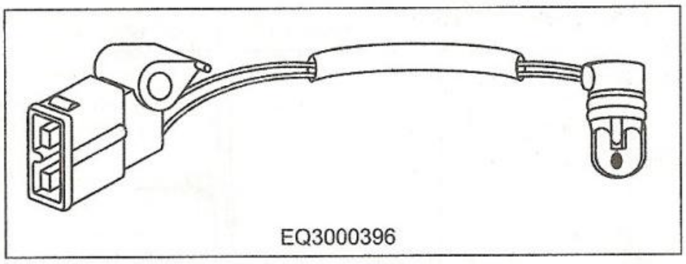

5.20 Air Temperature Sensor (ATS)

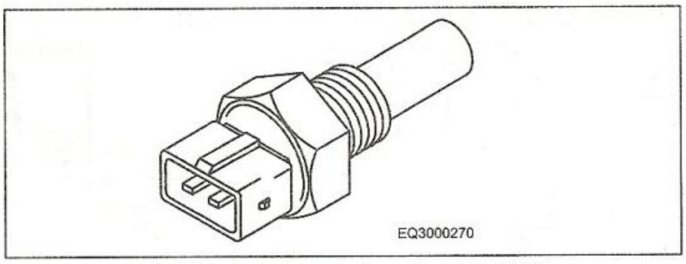

5.21 Coolant Temperature Sensor (CTS)

Sensors Type

Two-wire NTC sensors

Note: *The ATS has only a minor effect on engine operation.*

External Influences

- Vacuum leak
- Cooling system defect
- Low oil level

Checking the Sensors (General)

1 If either of the sensors is suspected of faulty operation, the following tests could be made.

2 Inspect the multi-plugs for corrosion, and damage.

3 Check that the connector terminal pins are fully pushed home and making good contact with the multiplug.

Checking Operation of Sensors with an Oscilloscope or Voltmeter

1 Roll back the rubber protection boot to the multi-plugs (where possible) OR connect a BOB between the ECM multi-plug and the ECM.

2 Connect the negative oscilloscope or voltmeter probe to an engine earth OR the sensor earth.

3 Connect the positive oscilloscope or voltmeter probe to the wire attached to the sensor signal terminal.

4 Engine at rest, ignition on

Testing the ATS

1 The signal voltage will vary according to the temperature of the air in the inlet tract or the coolant temperature. Refer to the chart for the voltages at various temperatures. As the under bonnet air rises in temperature, then the voltage signal passed to the ECM will reduce.

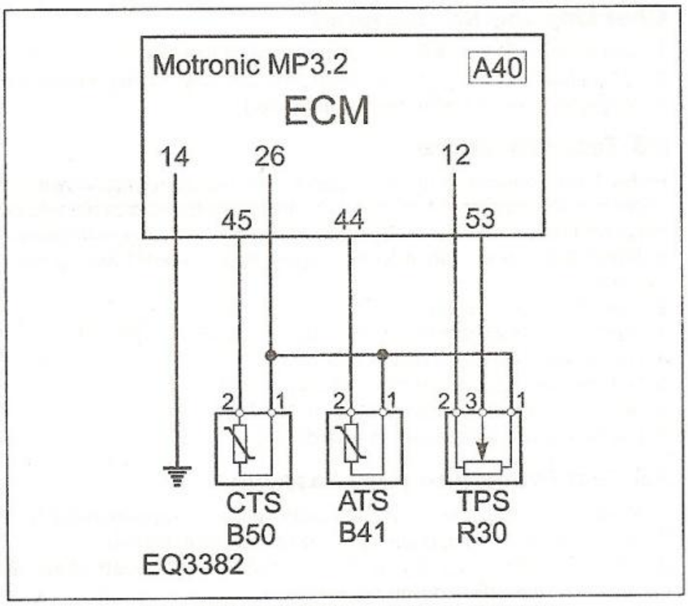

5.22 ATS/CTS/TPS local wiring diagram

2 When undergoing tests at various temperatures the ATS can be warmed with a hairdryer or cooled with something like 'Freezit', which is an ice cold aerosol spray, sold in electronic component shops. As the ATS is heated or cooled, the temperature will change and so too will the resistance and voltage.

3 If the ATS signal voltage is zero (supply is open circuit or shorted to earth) or at 5.0 volt level (ATS is open circuit) see the relevant tests below.

Engine Running Tests (CTS)

1 Allow the engine to become cold.

2 Engine at rest, ignition on

3 The signal voltage will vary according to temperature. Refer to the CTS chart for the voltages at various temperatures.

4 Check that the CTS voltage corresponds to the temperature of the CTS.

5 Start the engine and allow it to warm-up to normal operating temperature. As the engine warms-up, the voltage should reduce in accordance with the CTS chart.

6 A particular problem is where the CTS varies in resistance (and voltage) outside of its normal range.

- The CTS voltage may typically be 3.0 to 3.5 volts cold and 1.0 to 1.3 volts hot. If the voltage in that typical system varies from 1.75 volts cold to 1.25 volts hot, the engine will be difficult to start when cold yet run richer than normal when hot.
- This will NOT result in the generation of a fault code in self-diagnostic systems because the CTS is still operating within its design parameters.

7 If the CTS signal voltage is zero (supply is open circuit or shorted to earth) or at 5.0 volt level (CTS is open circuit) see the relevant tests below.

Zero Volts Obtained at the Signal Terminal

1 Check that the signal wire is not shorted to earth.

2 Check for continuity of the signal wiring between the sensor and the ECM.

3 If the sensor wiring is satisfactory, check all voltage supplies and earth connections to the ECM. If the voltage supplies and earth connections are satisfactory, the ECM is suspect.

5.0 volt Obtained at the Signal Terminal

1 This is the open circuit voltage and will be obtained in one of the following conditions:

2 The signal terminal in the sensor multi-plug is not making contact with the sensor.

3 The sensor or the sensor signal wire is open circuit.

4 The sensor earth connection is open circuit.

Signal or Supply Voltage at nbv Level

- Check for a short to a wire connected to the battery positive (+) terminal or a switched supply voltage.

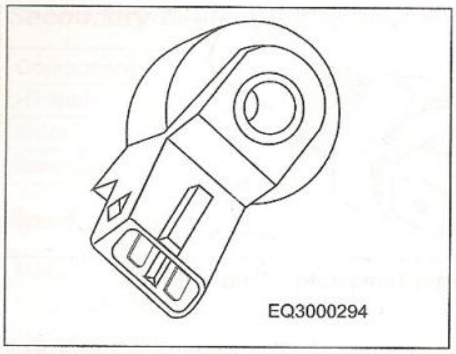

5.23 Knock Sensor (KS)

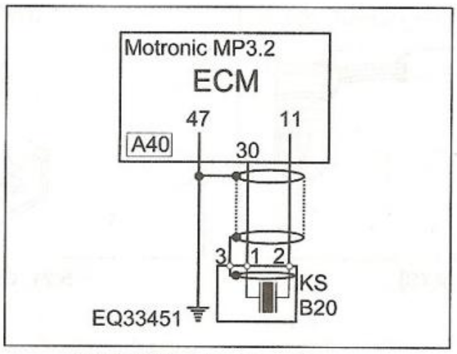

5.24 KS local wiring diagram

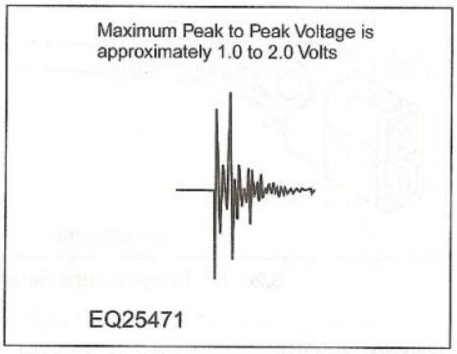
Maximum Peak to Peak Voltage is approximately 1.0 to 2.0 Volts

5.25 Typical KS output signal waveform

Resistance Tests with an Ohmmeter

ATS

- A resistance test may be made at various temperatures and a comparison made with the temperature/resistance chart. Refer to voltage tests for a method of heating/cooling the ATS.

CTS On Vehicle

- A resistance test may be made at various temperatures and a comparison made with the temperature/resistance chart. When the resistance is within the stated parameters for a cold engine (20°C) the coolant temperature should be within ± 5°C of that figure.

Note: *An allowance should be made for a temperature obtained by probing the outside of the CTS or coolant passage. This is because the actual temperature of the coolant may be hotter than the surface temperature of the CTS.*

CTS Off Vehicle

1 The recommended method is to remove the CTS from the vehicle.
2 Place it in a suitable container of water and measure the temperature of the water.
3 Measure the resistance of the CTS and check the resistance against the temperature chart.
4 Heat the water, periodically measuring the water temperature and the CTS resistance and comparing the resistance with the temperature chart.

Knock Sensor (KS)

For a given high compression engine the optimal ignition timing (at engine speeds greater than idle) is quite close to the point of onset of knock. However, running so close to the point of knock occurrence, means that knock will certainly occur on one or more cylinders at certain times during the engine operating cycle.

Since knock may occur at a different moment in each individual cylinder, Bosch Motronic MP3.2 employs a Knock Control unit – KCU (in the ECM) to pinpoint the actual cylinder or cylinders that are knocking. The Knock Sensor is mounted on the engine block and consists of a piezo-ceramic measuring element that responds to engine noise oscillations. This signal is converted to a voltage signal by the Knock Sensor **(see Illustration 5.23)** and returned to the KCU for evaluation and action. The knocking frequency is in the 15kHz frequency-band.

The KCU will analyse the noise from each individual cylinder and set a reference noise level for that cylinder based upon the average of the last 16 phases. If the noise level exceeds the reference level by a certain amount, the KCU identifies the presence of engine knock.

Initially, timing will occur at its optimal ignition point. Once knock is identified, the Knock Control microprocessor retards the ignition timing for that cylinder or cylinders by After knocking ceases, the timing is advanced until the reference timing value is achieved or knock occurs once more when the timing is again retarded. This procedure continually occurs so that all cylinders will consistently run at their optimum timing. If a fault exists in the Knock Control processor, Knock control sensor or wiring, an appropriate code will be logged in the self-diagnostic unit and the ignition timing retarded by the LOS program.

KS Voltage Measurements

Terminal Numbers

KS	ECM	Item	Volts
KS active			
1	30	Sensor return	0.25 max
2	11	KS signal	1.0 approx.
3	47	Shield earth	0.25 max

For local wiring diagram **(see Illustration 5.24)**

Note: *The KS signal will provide a maximum peak to peak voltage of approximately 1.0 volt .*

KS Frequency

Approximately 15 kHz

External Influences

- ncorrect base timing
- Low or inferior grade petrol
- Ignition system fault
- Coolant system fault
- Carbon build-up in cylinders

Checking the KS (General)

1 Inspect the KS multi-plug for corrosion, and damage.
2 Check that the connector terminal pins are fully pushed home and making good contact with the KS multi-plug.

KS Test Procedure

Note: *If the engine is not equipped with timing marks, it will be necessary to bring No 1 piston to TDC and make appropriate marks on the timing case and front pulley to carry out the following procedure.*

1 Attach the probe of an inductive timing light to the HT lead of No 1 cylinder.
2 Allow the engine to idle.
3 Gently tap the engine block close to No 1 cylinder.
4 The timing should be seen to retard.
5 Transfer the inductive probe to No 4 cylinder.
6 Gently tap the engine block close to No 4 cylinder.
7 The timing should be seen to retard.

KS Test Procedure (Oscilloscope)

1 Attach an oscilloscope low voltage probe to the KS signal terminal No 2
2 Gently tap the engine block close to one of the cylinders.
3 A Knock Sensor signal waveform should be displayed upon the oscilloscope **(see Illustration 5.25)**
4 Repeat the procedure for the other cylinders.

Manifold Absolute Pressure (MAP) Sensor

The main engine load sensor is the MAP sensor. A vacuum hose connects the MAP sensor (located within the ECM) **(see Illustration 5.1)** and the inlet manifold. Manifold vacuum acts upon the MAP sensor diaphragm and the ECM internally converts the pressure into an electrical signal. MAP is calculated from the formula: Atmospheric Pressure less Manifold pressure = Manifold Absolute Pressure.

Using the speed/density method, MEMS calculates the AFR from the MAP signal and the speed of the engine (CAS). This method relies on the theory that the engine will draw in a fixed volume of air per revolution.

When manifold vacuum is high (i.e. idle condition), MAP is moderately low and the ECM provides less fuel. When manifold vacuum is low (i.e. wide-open throttle), MAP is high and the ECM provides more fuel.

The inlet manifold on the MPi models is a 'dry' manifold. Since fuel does not enter the manifold – due to injection being made onto the back of the inlet valve, there is no risk of fuel being drawn into the MAP sensor to contaminate the diaphragm and a fuel trap is not used.

MAP Sensor Vacuum Measurements

Note: *All units are in mm Hg and typical rather than definitive. Refer to the Reference section for MAP sensor conversion tables.*

Condition	Vacuum (mm Hg)
Engine off	Zero
Idle	435 to 535
High load	Zero
Deceleration	560 to 600 approx.

MAP Sensor Type

Internal diaphragm in the ECM

Adjustment

Adjustment of the MAP sensor is not possible.

External Influences

- Excess fuel in fuel trap (if fitted) or vacuum hose
- General vacuum leak (induction manifold or other vacuum hoses)
- Vacuum leak in MAP sensor hose
- Faulty vacuum hose or connection
- Faulty engine inlet or exhaust valves
- Incorrect base idle speed
- Incorrect ignition timing
- Faulty spark plugs (wide gaps particularly)

MAP Sensor Tests (Integral with ECM)

1 Performance of the internal MAP sensor can be evaluated with the aid of a vacuum gauge.

2 Attach a 'T' piece connection in the vacuum hose that connects the inlet manifold to the ECM.

3 Use a short length of hose to connect a vacuum gauge to the 'T' piece in the vacuum hose.

Note: *It is important to test for vacuum at the actual MAP sensor hose connection. If correct vacuum values were obtained elsewhere, this would not prove that adequate vacuum was reaching the ECM.*

MAP Sensor Evaluation

1 Record the results of the vacuum with the engine off, at idle, with high load and decelerating. Compare the values obtained to the values detailed in the table.

2 If the engine vacuum is incorrect then check for:

3 Blockage at the inlet manifold connection giving reduced vacuum.

4 A damaged or perished vacuum pipe.

5 A leaky diaphragm (inside the ECM)

6 An engine mechanical fault i.e.:

- A general vacuum leak.
- Incorrect valve timing (cam belt alignment)
- Worn piston rings.

Testing the ECM Diaphragm and Vacuum Hose

1 Disconnect the vacuum hose at the inlet manifold. The other end of the hose must be connected to the ECM.

2 Connect a vacuum pump with gauge to the exposed end of the vacuum hose.

3 Pump the vacuum to between 400 and 500 mm Hg. The MAP sensor unit should hold vacuum for a minimum of two minutes.

4 If the vacuum does not hold, disconnect the hose from the ECM and reconnect the vacuum pump to the ECM's MAP connector.

5 Pump the vacuum to between 400 and 500 mm Hg. The MAP sensor unit should hold vacuum for a minimum of two minutes. A failure to hold vacuum would suggest a defective MAP sensor diaphragm. However, if the vacuum does hold, this suggests a faulty vacuum hose.

Note: *The diaphragm cannot be renewed separately and in the event of failure, a new ECM will be required.*

If Specialist Equipment is not Available

1 Check for vacuum at the inlet manifold connection.

2 Check for a damaged or perished vacuum pipe and inspect the ECM vacuum connection for signs of damage.

3 Suck on the ECM vacuum connection, and ensure that the diaphragm retains its pressure.

Evaluating Engine Response to Load

1 The following test is a method of checking engine response to MAP.

2 Run the engine until it attains normal operating temperature.

3 Stop the engine and connect a tachometer, stroboscopic timing light, an oscilloscope or a duty cycle meter to monitor injector performance.

4 Detach the vacuum hose from the ECM and connect a vacuum pump.

5 Plug the open hose connection to the inlet manifold.

6 Because some engines may not possess timing marks, it may be necessary to determine TDC and place appropriate marks on the timing cover and front pulley.

7 Pump the vacuum to between 435 and 535 mm Hg and start the engine.

8 Record the ignition timing and injection duty cycle values.

9 Increase the engine speed to approximately 1500 rpm and again record the ignition timing and injection duty cycle values. The timing will advance and so will the injection duty cycle. However, if the duty cycle is being measured in MS, the injection pulse will remain fairly constant.

10 Slowly reduce the vacuum so that the ECM receives an increased load signal

11 The timing will retard slightly and the injection pulse will increase.

12 No change to ignition timing or injection duration would indicate an ECM fault.

Throttle Position Sensor (TPS)

A Throttle Position Sensor (TPS) **(see Illustration 5.26)** is provided to inform the ECM of throttle position and rate of acceleration. The MP3.2 ECM uses the TPS signal to determine engine idle, engine

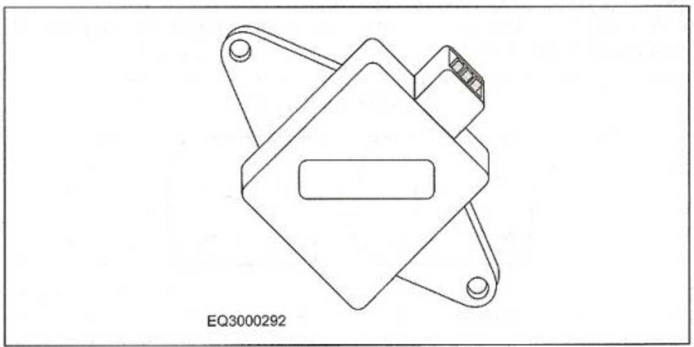

5.26 Throttle Position Sensor (TPS)

deceleration, acceleration and wide open throttle conditions so that the correct timing and injection map may be used. The TPS is a potentiometer with three wires. A 5 volt reference voltage is supplied to a resistance track with the other end connected to the sensor earth return. The third wire is connected to an arm that wipes along the resistance track and so varies the resistance and voltage of the signal returned to the ECM.

TPS Voltage Measurements

Terminal Numbers

TPS	ECM	Item	TPS position	Volts
Ignition on/running				
1	26	Sensor return		0.25 max
2	12	Supply voltage		5.0 ± 0.1
3	53	Signal voltage	Closed	0.5 ± 0.1
			Fully open	4.5 minimum

For local wiring diagram **(see Illustration 5.21)**

TPS Resistance Measurements

Note: *When the TPS is renewed, disconnecting the battery for approximately 15 minutes should initialise the ECM adaptive memory (see Warnings No 3 in the Reference section).*

Terminal Numbers

TPS	ECM	Item	TPS Position	Res. (Ω)
1 and 2	26 and 12	Fixed		Not stated *
1 and 3	26 and 53	Signal	Closed	Not stated *
			Fully open	Not stated*
2 and 3	12 and 53	Signal	Closed	Not stated *
			Fully open	Not stated *

** Although no values are stated by the VM, when the throttle is opened as described under Tests, the resistance should vary smoothly.*

Throttle Adjustments

- The throttle plate angle is critical and should not be tampered with.
- The TPS is non-adjustable.

External Influences

- Incorrect adjustment (where adjustment possible)
- Over tightening of fixing screws
- Loose TPS multiplug
- Maladjusted or sticking throttle plate
- Maladjusted or sticking throttle cable

Checking the TPS (General)

1 Inspect the TPS multi-plug for corrosion, and damage.

2 Check that the connector terminal pins are fully pushed home and making good contact with the TPS multi-plug.

3 Any of the above faults are common reasons for a poor or inaccurate signal from the TPS.

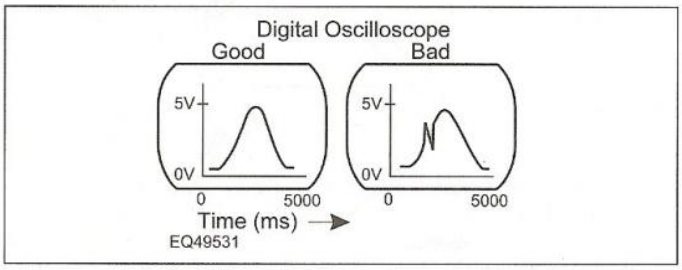

5.27 Typical TPS output signal waveform

Note: *Several different configurations are used to connect the ECM pins to the TPS terminals for the various Citroen & Peugeot vehicles equipped with Bosch Motronic MP3.1, 3.2 & 5.1. Refer to the local wiring diagram to for details of the correct wiring for a specific vehicle.*

Checking TPS Operation with an Oscilloscope or Voltmeter

1 Roll back the rubber protection boot (where possible) to the TPS multi-plug OR connect a BOB between the ECM multi-plug and the ECM.

2 Connect the negative oscilloscope or voltmeter probe to an engine earth OR the TPS earth return.

3 Connect the positive oscilloscope or voltmeter probe to the wire attached to the TPS signal terminal.

4 Throttle closed, ignition on.

5 Compare the throttle-closed voltage to that specified.

6 Open and close the throttle several times and check for a smooth voltage increase to a value greater than 4.25 volts

7 If a digital voltmeter is used, then it is useful for it to have a bar graph facility.

8 If an oscilloscope timebase of approximately 5 seconds is available, then it should be possible to plot the TPS output curve on the screen as the throttle is opened and then closed **(see Illustration 5.27)**

9 If the TPS signal voltage is non-existent go to the tests below headed 'Signal voltage not available'

Erratic Signal Output

1 An erratic output occurs when the voltage output is stepped, or drops to zero or becomes open circuit.

2 Check for a stable resistance between the supply and earth terminals and a variable resistance between the signal & supply and the signal & earth terminals.

3 When the TPS signal output is erratic, this usually suggests a faulty signal track. In this instance, a new TPS is the only cure.

Signal or Supply Voltage at nbv Level

- Check for a short to a wire connected to the battery positive (+) terminal or a switched supply voltage.

Signal Voltage not Available

1 Check for the reference voltage supply at the TPS supply terminal.

2 Check the earth return connection at the TPS earth terminal.

3 If the supply and earth are satisfactory, check for continuity of the signal wiring between the TPS and the ECM.

4 If the supply and/or earth are unsatisfactory, check for continuity of the supply and/or earth wiring between the TPS and the ECM.

5 If the TPS wiring is satisfactory, check all voltage supplies and earth connections to the ECM. If the voltage supplies and earth connections are satisfactory, the ECM is suspect.

Vehicle Speed Sensor (VSS)

The Vehicle Speed Sensor (VSS) **(see Illustration 5.28)** is used to advise the ECM of vehicle speed. It operates upon the Hall-effect principle and is mounted directly upon the gearbox.

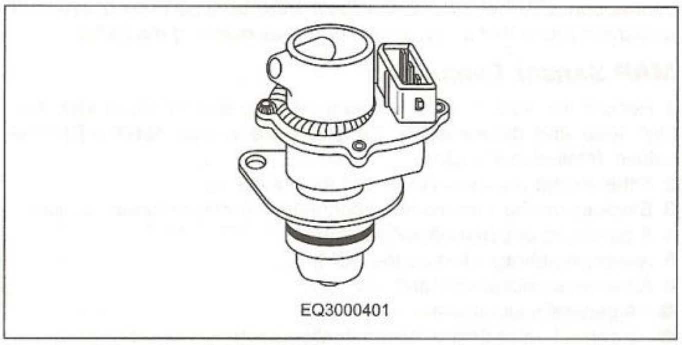

5.28 Vehicle Speed Sensor (VSS)

A voltage is applied to the VSS from the system relay when it is in the switched on position. As the speedometer cable turns, the hall switch is alternately turned on and off to return a square wave signal to the ECM. The frequency of the signal (8 pulses per revolution) denotes the vehicle speed.

VSS Voltage Measurements

Terminal Numbers

VSS	ECM	Item	Volts
1	—	Supply voltage, FP relay : t9 or ignition switch : t15	nbv
Vehicle in motion			
2	—	Return	0.25 max
3	9	Signal voltage	nbv to zero

For local wiring diagram **(see Illustration 5.29)**

VSS Frequency

8 pulses per revolution of the speedometer cable.

Checking the VSS (general)

1 Inspect the VSS multi-plug for corrosion, and damage

2 Check that the terminal pins are fully pushed home and making good contact with the VSS plug.

Checking VSS Operation

1 Testing is quite straightforward. The three wires to the connector are supply, earth and signal.

2 Backprobe the VSS multi-plug OR connect a BOB between the ECM multi-plug and the ECM.

3 Connect the negative probe of an oscilloscope, dwell meter or voltmeter to an engine earth.

4 Connect the positive probe of the oscilloscope, dwell meter or voltmeter to the wire attached to the VSS signal terminal No 3 **(see Illustration 5.30)**

Checking for a VSS Signal

Note: *The supply voltage may originate from the ignition switch or system relay. If the supply is applied from the system relay, the connection may be from the first or second relay contact. The first relay contact applies voltage when the ignition is on, the second relay contact applies voltage only when the engine is running.*

1 Switch on the ignition or start the engine as appropriate.

2 The drive wheels must rotate for a signal to be generated. This may be accomplished by using one of the two following methods:

- Push the vehicle forward.
- Place the vehicle upon a ramp so that the drive wheels can freely turn. Either rotate the wheels by hand or run the engine in gear at a very slow speed.

3 A waveform, duty cycle or voltage should be obtained.

No Signal or an Erratic Signal, Duty Cycle or Voltage

1 VSS multi-plug disconnected, ignition on

2 Check for a voltage supply to the VSS supply terminal

3 No voltage: Check the supply from the ignition switch or system relay as appropriate.

4 Check the earth connection at the VSS earth terminal.

5 Disconnect the VSS multiplug

6 Move the voltmeter positive probe to the signal terminal.

7 A voltage between 8.5 and 10.0 volts should be obtained.

Supply and Earth Voltages OK

- The VSS is suspect or the VSS is not being rotated by the speedometer drive (i.e. broken cable or gearbox fault).

No Signal Voltage

1 Check the voltage at the ECM multiplug terminal.

2 If voltage is satisfactory at the ECM, check the continuity of the signal wiring.

3 If no voltage is available at the ECM, check all voltage supplies and earth connections to the ECM. If the voltage supplies and earth connections are satisfactory, the ECM is suspect.

Actuators

Induction Change-over Valve (ICOV) (Non-turbo models only)

Under all operating conditions, air flows into the induction manifold through the throttle valve in the throttle body. However, on PSA vehicles equipped with Bosch Motronic MP3.2, a variable length induction system is utilised to improve the flow of air into the engine at both low and high engine speeds. PSA call this a Variable Acoustic Induction System **(see Illustration 5.31)**.

At low engine speeds, airflow is comparatively slow and this can lead to inefficient fuel atomisation when the inlet port to the inlet valve is large. Ideally the port should be small which leads to higher air speeds and much better atomisation and a more efficient engine. The condition is accentuated in 16 valve engines, which tend to be sluggish at low engine speeds.

Conversely, at high engine speeds the volume of air into the engine needs to be high which demands a larger inlet port. A small port at high engine speeds would restrict engine performance – particularly in

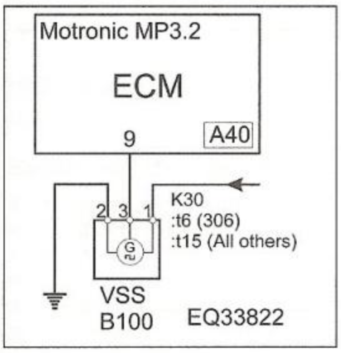

5.29 VSS local wiring diagram

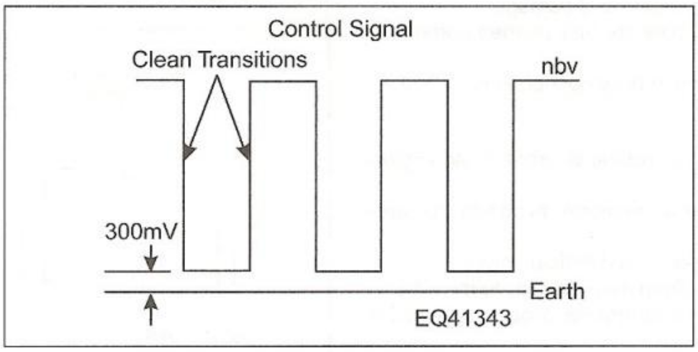

5.30 Typical VSS output signal waveform

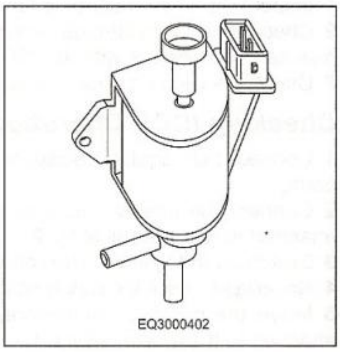

5.31 Induction Change-over Valve (ICOV)

16 valve engines, which are more efficient at higher engine speeds. For effective engine operation over the entire engine rpm range then, a variable inlet port would seem to be required.

Traditionally, engines equipped with a carburettor overcame this particular problem with the aid of a twin venturi air inlet. A number of fuel injected engines have used a similar arrangement in the throttle barrel. However, PSA uses a somewhat different solution.

The inlet port to each set of inlet valves is divided into two ports. In addition, the manifolds are curved so that the outer inlet path is long. The secondary inlet curves inside the long inlets to give a short path – which improves the airflow at high speed to improve the power output. The shorter secondary inlet is provided with its own throttle valve whilst the other is left permanently open.

A vacuum supply from the inlet manifold is piped to the vacuum control valve via a vacuum tank and the ICOV. The vacuum tank 'stores' vacuum so that when the ICOV is actuated, the secondary throttle action will be more controlled. Voltage is applied to the ICOV from the main relay and the earth path is completed through the ECM. When engine rpm is low or very high the ECM switches 'on' the ICOV so that vacuum will act upon the vacuum control valve and the change-over throttle valve will open.

This means that at both low and high engine speeds, air will pass into the engine through both inlet ports. The diameter is large enough to satisfy engine demand at high engine speeds and the acoustic effect will ensure good fuel atomisation at low speeds.

When engine speed lies in the mid-range, the ECM switches the ICOV 'off' so that the vacuum supply to the vacuum control valve is discontinued and the secondary throttle will close. The engine thus receives the correct volume of air for all operating conditions of speed and load.

ICOV Voltage Measurement

Terminal Numbers

ICOV	Component	Item	Volts
Ignition on or engine speed between 1800 and 5200 rpm			
2	Relay: t5	Supply voltage	nbv
1	ECM: t6	Switching wire	nbv
Engine running below 1800 rpm or greater than 5200 rpm			
1	ECM: t6	Switching voltage	0.25 max

For local wiring diagram **(see Illustration 5.2 or 5.3 or 5.4 or 5.5 or 5.6)**

ICOV Resistance Measurement

Terminal Numbers

ICOV	ECM	Res. (Ω)
1 and 2	37 and 6	50

Checking the ICOV (General)

1 Inspect the ICOV multi-plug for corrosion, and damage.
2 Check that the multi-plug terminal pins are fully pushed home and making good contact with the ICOV.
3 Check the vacuum hoses for leaks and poor connections.

Checking ICOV Operation.

1 Connect the negative oscilloscope or voltmeter probe to an engine earth.
2 Connect the positive oscilloscope or voltmeter probe to the wire attached to ICOV terminal No 2.
3 Switch on the ignition. The voltmeter should indicate nbv.
4 No voltage, check the supply voltage from the main relay terminal No 5.
5 Move the positive oscilloscope or voltmeter probe to the wire attached to ICOV terminal No 1.
6 Ignition on, the voltmeter should indicate nbv.
7 No voltage, check the resistance of the ICOV.
8 Start the engine and allow it to idle. The voltmeter should display a voltage less than 1.0 volts.
9 If voltage from 8 above is nbv, but the ICOV is not actuated carry out following tests
10 Check continuity of wiring, back to the ECM pin No 6.
11 If the ICOV wiring is satisfactory, check all voltage supplies and earth connections to the ECM. If the voltage supplies and earth connections are satisfactory, the ECM is suspect.
12 Raise the engine speed over the specified rpm value. The voltage should rise from less than 1.0 volt to nbv.
13 If not, the ECM is suspect.
14 Briefly raise the engine speed over the specified high rpm value. The voltage should reduce to less than 1.0 volt.
15 If not, the ECM is suspect.
16 Check the mechanical operation of the ICOV.

Checking the ICOV Resistance

1 Disconnect the electrical multi-plug from the ICOV.
2 Connect an ohmmeter between the two terminals on the ICOV. Compare the value with the specified resistance.
3 Connect an ohmmeter between one of the two terminals on the ICOV and the body of the ICOV. The ohmmeter should indicate infinity.

Checking the ICOV Mechanical Operation

1 Disconnect the electrical multi-plug from the ICOV.
2 Disconnect the two vacuum hoses to the ICOV.
3 Connect a vacuum pump to the inlet connection.
4 Operate the pump to apply a vacuum to the inlet pipe. On releasing the pump handle, the vacuum should hold.
Note: *If a vacuum pump is not available, try to blow through the pipe. The attempt should be unsuccessful.*
5 Connect a temporary jumper lead from one terminal of the ICOV to the battery positive terminal.
6 Connect a temporary jumper lead from the other terminal of the ICOV to the battery negative terminal.
7 Operate the pump and attempt to apply a vacuum to the inlet pipe. The vacuum should not hold and it should now be possible to blow through the inlet pipe to the outlet pipe.

Checking the ICOV Control Valve Operation

1 Detach the vacuum hose from the ICOV control valve.
2 Connect a vacuum pump to the ICOV control valve inlet pipe.
3 Apply a vacuum of 300 mm Hg to the ICOV control valve. The control valve should move quickly and smoothly to actuate the ICOV throttle valve its fully open position.
4 Release the vacuum. The control valve should move quickly and smoothly to fully close the ICOV throttle valve.
5 Reconnect the vacuum hose to the ICOV control valve.

Idle Speed Control Valve (ISCV)

The Idle Speed Control Valve (ISCV) **(see Illustration 5.32)** is a solenoid controlled actuator that the Bosch Motronic MP3.2 ECM

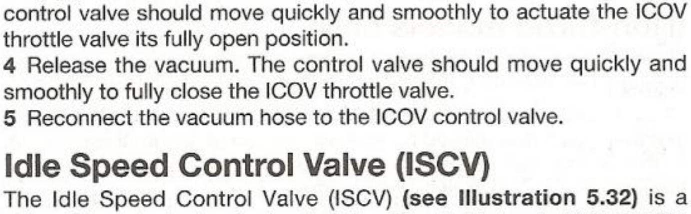

5.32 Idle Speed Control Valve (ISCV)

uses to automatically control idle speed during normal idle and during engine warm-up. The ISCV is located in a hose that connects the inlet manifold to the air filter side of the throttle plate. The Bosch Motronic MP3.2 ECM via ECM pins No 22 and No 4 controls the 3-pin ISCV.

The ISCV is a DC motor that the ECM can rotate either clockwise or anti-clockwise. Rotating in one direction will open the valve and rotating in the opposite direction will cause it to close. A voltage supply is applied to the ISCV from the battery and the earth for the motor is made through two connections to the ECM.

Rotation of the motor in the appropriate direction is accomplished by actuating the motor through one or the other of the earth circuits. In reality the two circuits are opposed. This prevents the valve from being fully opened of closed in one particular direction. The valve will thus take up an average position that reflects circuit bias to be open or closed. Normally, this bias would be towards the open position.

A duty cycle can be measured on each earth circuit to determine the opening or closing time period as a percentage of the total time available.

When an electrical load, such as headlights or heater fan etc are switched on, the idle speed would tend to drop. The idle ECM will sense the load and rotate the ISCV to increase the airflow through the valve and thus increase the idle speed. When the load is removed, the ECM will pulse the valve so that the airflow is reduced. Normal idle speed should be maintained under all cold and hot operating conditions. If the ISCV fails it will fail in a fail-safe position with the aperture almost closed. This will provide a basic idle speed.

ISCV Voltage Measurement

Terminal Numbers

ISCV	ECM	Item	Volts
Ignition on			
2	—	Supply voltage, relay: t6 (: t5 ZX models)	nbv
1	22	Pulse	nbv*
3	4	Pulse	nbv*

**Ignition on, nbv will be obtained. Once the engine is running, the voltage will decrease and it will decrease further when a load is placed upon the engine.*

For local wiring diagram **(see Illustration 5.2 or 5.3 or 5.4 or 5.5 or 5.6)**

ISCV Resistance Measurements

ISCV	ECM	Res. (Ω)
1 and 2	22 and 37	20
2 and 3	37 and 4	20
1 and 3	22 and 4	40

ISCV duty cycle table

Terminal	Frequency Hz	Duty cycle (%)
1		31
3		69

ISCV Type

Rotary

External Influences

- Basic setting of throttle plate
- Vacuum leak
- Sticking throttle
- Sticking or maladjusted throttle cable
- Incorrect CO value
- Incorrect ignition timing
- Ignition system fault
- Incorrect CTS signal

Checking the ISCV (General)

1 Inspect the ISCV multi-plug for corrosion, and damage.

2 Check that the connector terminal pins are fully pushed home and making good contact with the ISCV multi-plug.

3 The following faults will adversely affect idle integrity and these components should be checked before attempting diagnosis of the ISCV.

- Engine mechanical fault
- Incorrect ignition timing
- An incorrectly adjusted throttle valve
- An incorrectly adjusted TPS
- Carbon fouled throttle plate
- An induction vacuum leak
- Incorrect CO level
- Clogged air filter

ISCV Tests

1 Allow the engine to idle

2 Check that the idle speed is within its operating limits.

3 Load the system by switching on the headlamps, rear screen heater and heater motor onto high. The idle speed should barely change.

4 Quickly squeeze one of the air hoses. The idle speed should surge and then return to normal.

5 If the idle condition meets the above criteria, it is unlikely to be at fault.

Checking ISCV Operation with an Oscilloscope, Voltmeter or Dwell meter

1 The three wires to the ISCV multi-plug are supply and two signal wires.

2 Roll back the rubber protection boot (where possible) to the ISCV multi-plug OR connect a BOB between the idle ECM multi-plug and the ECM.

3 Connect the negative oscilloscope, voltmeter or dwell meter probe to an engine earth.

4 Connect the positive oscilloscope, voltmeter or dwell meter probe to the wire attached to one of the two ISCV signal terminals.

5 Engine running. A square waveform, varying voltage or a duty cycle will be obtained in accordance with the values specified **(see Illustration 5.33)**

Note: *The reading on a digital voltmeter will indicate the average voltage.*

6 Load the system by switching on the headlamps, rear screen heater and heater motor onto high. The average voltage and duty cycle will change. The frequency of pulse should remain constant.

No ISCV Waveform or Signal

1 Ignition on, check for nbv at the supply terminal.

2 If no voltage, trace the wiring back to the appropriate ECM terminal.

3 Check for continuity of wiring between the ISCV and the ECM switching terminals.

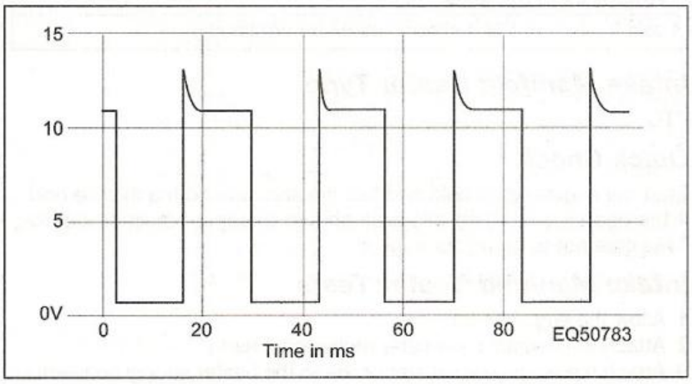

5.33 Typical ISCV signal waveform from the ECM

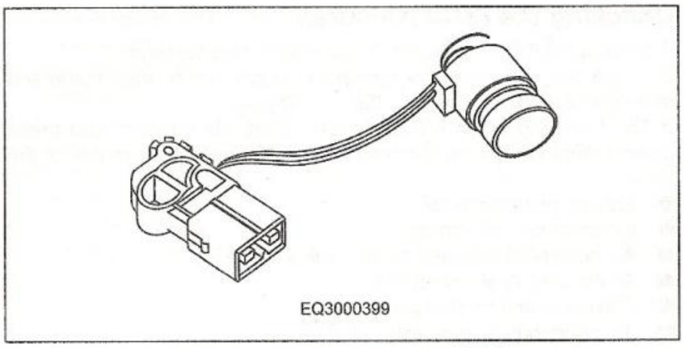

5.34 Inlet Manifold Heater (IMH)

Good Signal, but no Idle

1 Remove the ISCV multi-plug.
2 Check the resistance between the specified terminals. **Note:** Make the following connections very briefly.
3 Use a jump lead to connect a battery voltage supply to one of the ISCV supply terminals.
4 Us a second jump-lead to connect the ISCV switching terminal to earth. The ISCV should actuate.
5 Move the second jump lead to connect the other ISCV terminal to earth. The ISCV should actuate in the reverse direction.
6 If the ISCV does not actuate, or operation is poor the ISCV is suspect.

Intake Manifold Heater (IMH)

The Intake Manifold Heater (IMH) **(see Illustration 5.34)** is provided to heat the throttle body so that icing does not occur during cold conditions. The heater is operating at all times whilst the engine is running. The heater works on the PTC principle and allows a greater current to quickly heat throttle body during the warm-up period. As the heater becomes hotter, the resistance increases and the current reduces. Since the supply voltage originates from the second contact of the FI relay, voltage is only available when the engine is running.

Throttle Body Heater Voltage Measurement

Terminal Numbers

IMH	Item	Volts
Engine running		
2	Supply voltage, FI relay: t1 (: t13 ZX, Xantia models)	nbv
1	Earth	0.25 max.

For local wiring diagram **(see Illustration 5.2 or 5.3 or 5.4 or 5.5 or 5.6)**

Intake Manifold Heater Resistance

Terminals	Resistance
1 and 2	Not stated (check for continuity)

Intake Manifold Heater Type

PTC

Quick Check

Start the engine when cold and feel the area around the throttle body, if the heater is working this area should become hot quite quickly. Take care not to burn your fingers!

Intake Manifold Heater Tests

1 Allow the engine to idle
2 Attach the negative voltmeter probe to an earth
3 Attach the positive voltmeter probe to the heater supply connector
4 nbv should be obtained

No Voltage Supply

5 Check the relay output
6 Check continuity of the wiring between the relay and the heater
7 nbv, but heater does not operate
8 Check the heater resistance
9 Check the heater earth

Wastegate Control Solenoid (WCS) (Turbo only)

The volume of air that can be inhaled limits the power output for any given engine. Simply put, the more air that an engine can cram into a cylinder, the greater is the volumetric efficiency and the more power will be produced. Obviously, as the air intake is increased, so too must the fuel intake so that the AFR is maintained.

Turbo charging is a method of compressing the inlet air so that the maximum charge can be forced into a cylinder under high pressure or boost.

Exhaust gases are used to drive a turbine and impeller to compress the intake air. The turbine is mounted in the exhaust system fairly close to the exhaust manifold. The compressing of air generates heat and the air tends to expand so losing some of its efficiency. PSA use an intercooler, which is a kind of air radiator, so that the air is cooled on its way to the inlet manifold and this ensures maximum compression of the air charge.

Boost Control (Turbo models)

As the volume of exhaust gases increase, the turbine is driven ever faster and at high engine speeds there is a danger of over-high turbine speeds and over pressurisation causing engine damage. This is overcome by using a wastegate control valve to actuate a wastegate flap in the exhaust system, upstream of the turbo.

A hose connects the turbo compressor to the diaphragm of the wastegate actuating valve. As pressure rises to a pre-determined level, the compressed air acts upon the wastegate diaphragm, which opens to mechanically actuate a flap inside the exhaust pipe. Some of the exhaust gases flow through the flap and by-pass the turbine so that the turbine slows and boost pressure is reduced.

In its simplest form, this provides adequate turbo protection from over pressurisation. However, the ECM utilises a control system so that maximum turbo boost can be varied to improve power output under acceleration and at different engine speeds.

The heart of wastegate control is a WCS **(see Illustration 5.35)**, which is a solenoid controlled actuator whose function is to allow all or part of the boost to be applied to the wastegate. The WCS is located in the hose from the turbo to the wastegate. When the WCS is open or partially open, a variable volume of air (depending upon WCS position) is vented back to the low pressure side of the induction system.

A voltage supply is applied to the WCS from the either the main or fuel pump relay (depending on model) and the earth for the valve is made through a connection to ECM pin No 6.

When the engine is stopped, the WCS is closed and air is fully directed to the wastegate actuator. This is the failsafe position and if

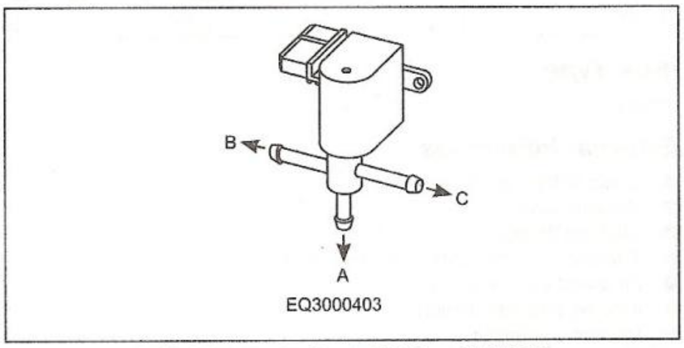

5.35 Wastegate Control Solenoid (WCS)

the WCS fails, boost pressure will never reach its set limit and engine power will be reduced. Once the engine is running, the ECM pulses the WCS open so that approximately 50% of the turbo output is directed towards the wastegate. The ECM tends to pulse the valve with a fixed frequency and the duration of the pulse is varied so that the valve is open for longer or shorter time periods as desired. This method allows the ECM to set the exact opening duration to achieve the correct boost pressure for all operating conditions. Below 6000 rpm, the boost pressure is set to 0.9 bar. Between 6000 and 6700 rpm, the WCS is gradually closed to allow more boost pressure to act upon the wastegate. At 6700 rpm the WCS is fully closed and all boost pressure is directed to the wastegate. The boost pressure is now set to 0.3 bar.

If the inlet air becomes too hot (above 70°C), air density is reduced and the AFR will become leaner. A lean mixture could lead to detonation and in turn this could cause engine damage. When the ECM senses an over heated air charge, it pulses the WCS towards the closed position to relieve boost pressure. A lower boost pressure will reduce the air temperature and the risk of detonation is averted or at least reduced.

WCS Voltage Measurement

Terminal Numbers

WCS	Component	Item	Volts
2	Main Relay: t6	Supply	nbv
1	ECM: t6	Switching wire	nbv

For local wiring diagram **(see Illustration 5.5)**

WCS Resistance Measurement

Terminal Numbers

WCS Terminals	Res. (Ω)
1 and 2	30

External Influences

- MAP sensor
- Maladjusted or defective wastegate control
- Faulty ECM

Checking the WCS (General)

1 Inspect the WCS multi-plug for corrosion, and damage.

2 Check that the connector terminal pins are fully pushed home and making good contact with the WCS multi-plug.

Checking the WCS Control Signal

1 This is very difficult to check the control signal without using a chassis dynamometer (rolling road), because the signal is only present at engine speeds over 2500 rpm and under load.

2 It may be possible to check for a WCS waveform by connecting a portable oscilloscope across the WCS multi-plug terminals.

3 However, pursuing the following test procedures can check the operation of the WCS and circuitry.

Checking the WCS Operation

1 The two wires to the WCS connector are supply and ECM actuated earth.

2 Backprobe the WCS multi-plug OR connect a BOB between the ECM multi-plug and the ECM.

3 Connect the negative oscilloscope or voltmeter probe to an engine earth.

4 Connect the positive oscilloscope or voltmeter probe to the wire attached to WCS supply terminal No 2.

5 Ignition on, check for nbv at the WCS supply terminal.

6 If no voltage obtained, trace the wiring back to the main FI relay.

7 Check the resistance of the WCS.

8 Disconnect the WCS multi-plug

9 Turn off the ignition

10 Disconnect the electrical connections & vacuum pipes from the valve.

11 Ensure that air does not flow from port A to port B and that air does flow from port A to port C.

12 Connect a jumper wire from terminal No 2 to a voltage supply.

13 Connect a jumper wire from terminal No 1 to earth.

14 Check that air now flows from port A to port B and that air does not flow from port A to port C.

15 If the WCS actuates check for continuity of wiring between the WCS and the ECM switching terminal

16 If the WCS wiring is satisfactory, check all voltage supplies and earth connections to the ECM. If the voltage supplies and earth connections are satisfactory, the ECM is suspect

WCS Resistance

- Remove the multi-plug and measure the continuity of the WCS between the two terminals.

Fuel Injection System

The Bosch Motronic ECM contains a fuel map with an injector opening time for basic conditions of speed and load. Information is then gathered from engine sensors such as the MAP sensor, CAS, CTS, and TPS. As a result of this information, the ECM will look-up the correct injector pulse duration right across the engine rpm, load and temperature range.

The Bosch Motronic MP3.2 system is a sequential multi-point injection system and pulses all injectors in cylinder sequence and once per engine cycle. All of the required fuel for each cylinder is injected every two engine revolutions and is synchronised with the opening of the inlet valve with reference to the CMP signal. During engine cranking, the pulse duration and frequency of pulsing is increased to provide a richer air/fuel mixture.

5.36 Fuel Injector

Frequency of injection increases to once per engine revolution during engine cranking. Once the engine has started and is going through its warm-up cycle. The injection duration will depend on the engine temperature signal from the CTS.

During engine deceleration, injector operation is cut-off. Injection is resumed once the engine speed has fallen to approximately 1280 rpm Also, at an engine speed of 7211 rpm (ZX) or 6840 (Xantia) the ECM cuts off the injector operation as a safety precaution to prevent over revving. The cut-off speed for other vehicles with MP3.2 is unknown.

Fuel Injectors

The fuel injectors **(see Illustration 5.36)** are magnetically operated solenoid valves that are actuated by the ECM. Voltage to the injectors is applied from the main relay and the earth path is completed by the ECM for a period of time (called pulse duration) of between 1.5 and 10 milliseconds. The pulse duration is very much dependent upon the engine temperature, the load, the speed and the operating conditions.

When the magnetic solenoid closes, a back EMF voltage of up to 60 volts is induced.

The fuel injectors are mounted in the inlet stubs to the engine inlet valves so that a finely atomised fuel spray is directed onto the back of each valve.

Injector Voltage Measurements

Terminal Numbers

Injector	ECM	Relay	Item	Volts
Ignition on				
2	—	13 (4 for ZX, Xantia)	Supply voltage	nbv
1	17	—	Pulse wire	nbv
1	34	—	Pulse wire	nbv
1	16	—	Pulse wire	nbv
1	35	—	Pulse wire	nbv

For local wiring diagram **(see Illustration 5.37)**

Injector Resistance Measurements

Terminal Numbers

Injector	ECM	Res. (Ω)
1 and 2	—	16

Injector Duty Cycle Table

	Duty Cycle %	ms
Engine cold		
Cranking	5.00+	11.0 – 12.0
Idle	5.5 – 7.5	4.5+
Engine warm		
Cranking	4.0+	3.9+
Idle	3.0 – 6.0	3.26
2000 rpm	7.0 – 14.0	3.0
3000 rpm	11.0 – 16.0	3.0
Snap acceleration	20.0+	12.0+
Deceleration	Zero	Zero

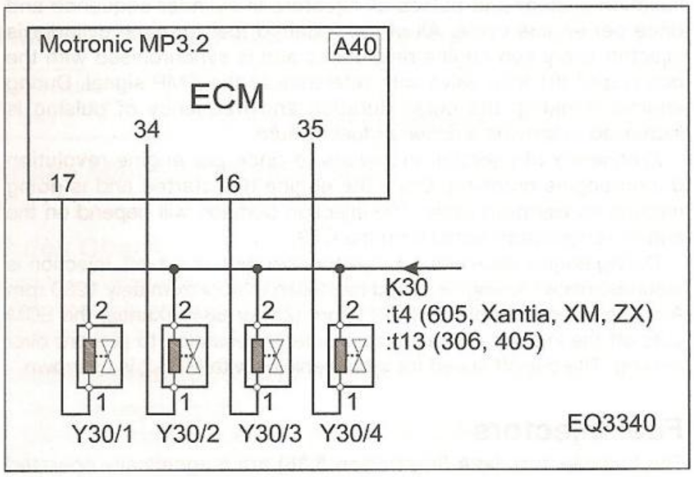

5.37 Fuel Injectors local wiring diagram

Injection Type

Sequential injection

External Influences

- Vacuum leaks
- Defective ignition system
- Clogged air filter
- Dirty engine oil
- Fuel tank breather faults

Checking the Injectors (General)

1 Inspect the injector multi-plugs for corrosion, and damage.

2 Check that the terminal pins in all multi-plugs are fully pushed home and making good contact with the injector.

3 Check for corrosion in the connection plugs between the relay and the injector, and the ECM and the injector. Corrosion in connection plugs is a common reason for poor injector performance.

Checking Injector Operation with an Oscilloscope or Dwell meter

1 The two wires to the injector multi-plug are supply and signal.

2 Roll back the rubber protection boot (where possible) to the injector multi-plug, remove the protection casing OR connect a BOB between the ECM multi-plug and the ECM.

3 Connect the negative oscilloscope or dwell meter probe to an engine earth.

4 Connect the positive oscilloscope or dwell meter probe to the wire attached to the injector signal terminal No 1. Since all injectors are pulsed individually, any injector will do, but each will have to be tested individually.

Note: *An injector dwell reading will only be obtained upon the wire connecting the injector to the ECM. If you cannot obtain a reading, reconnect the probe to the other terminal and retry.*

Engine Non-runner Tests

1 Crank the engine.

2 Either a waveform or a duty cycle reading (pulse width) should be obtained. If the instrument can measure the value in milliseconds, this could be even more useful **(see Illustration 5.38)**

3 Measure the frequency of pulse. The initial value should reduce after several seconds of cranking.

Good Waveform or Signal

1 The three major considerations are:

- Does the signal waveform conform to an acceptable pattern?
- Is the pulse signal length acceptable for the temperature?
- Does the pulse frequency increase for several seconds on initial cranking?

2 If the answer is yes to all three questions, the reason for non-starting is unlikely to be the injection system. However, a fuel pressure test should also be carried out.

3 If the primary ignition signal is also providing an acceptable signal, the fault is unlikely to be related to the ECM.

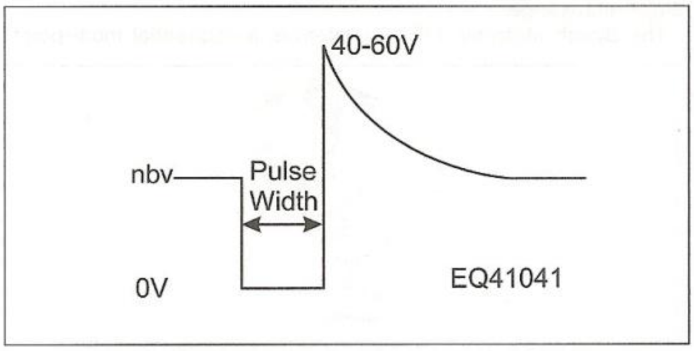

5.38 Typical input signal waveform to the injectors

Poor or No Injector Waveform or Signal

1 Check for an injector pulse on the other injectors.
2 Check the CAS for a good signal.
3 Check for a voltage supply to the injector multi-plug.
4 No voltage, check the injector resistance and the injector voltage supply.

Note: *If the 'scope displays voltage at nbv level, but no waveform, voltage is reaching the injector but the circuit is not being actuated.*

5 Disconnect the ECM multi-plug see Warnings No 3
6 Switch on the ignition.
7 Use a jumper lead to very briefly touch each one of the injector actuator pins in the ECM multi-plug to earth.
8 If the injector actuates, check the ECM main voltage supplies and earths. If tests reveal no fault, the ECM is suspect.
9 If the injector does not actuate, check for nbv at the ECM pin.
10 Voltage, the injector is suspect.
11 No voltage, check for continuity of wiring between the injector multi-plugs and the ECM multi-plug.

A Pulse Width that is too Long or too Short

1 Check the CTS.
2 Check the MAP.

Note: *If the ECM has entered LOS due to a fault in one of the sensors, the engine may generally behave quite well whilst the engine is hot, but may be difficult to start when cold.*

Engine Running Tests

1 Run the engine at various speeds. Record the values obtained at the following engine speeds.

- Idle speed
- 2000 rpm
- 3000 rpm
- Slow throttle increase
- Rapid throttle increase
- Deceleration: raise the engine speed to approximately 3000 rpm and release the throttle.

2 Check that the pulse width from each injector is similar to the pulse width from the other cylinders (within 0.1 ms).
3 Compare the results with the specified figures for both a cold and hot running engine.
4 The pulse width in % should increase in value as the engine rpm is raised.
5 The pulse width in ms should not change much in value as the engine rpm is slowly raised.
6 Under rapid acceleration, the pulse width should show a great increase in value.
7 Under deceleration, when the engine is hot, the pulse width should disappear (oscilloscope) or drop to zero (digital meter) and reappear as the engine speed sinks below 1200 rpm.

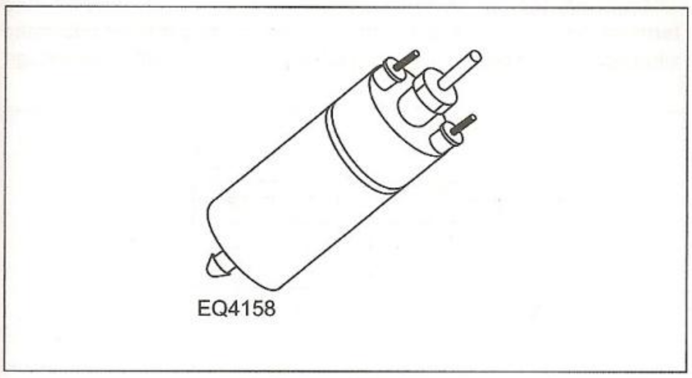

5.39 External Fuel Pump

8 Where the meter does not drop to zero, check the throttle valve for correct adjustment and the TPS for correct operation.
9 Noise from the injectors should also temporarily disappear as the cut-off operates.

A Pulse Width that is too Long or too Short

1 Check the CTS.
2 Check the MAP.

Note: *If the ECM has entered LOS due to a fault in one of the sensors, the engine may generally behave quite well whilst the engine is hot, but may be difficult to start when cold*

Resistance Tests

- Remove each injector multi-plug and measure the resistance of the injector between the two terminals.

Fuel Pressure System

The fuel pump normally provides much more fuel than is required, and surplus fuel is thus returned to the fuel tank via a return pipe. In fact, a maximum fuel pressure in excess of 4 bar is possible in this system. To prevent pressure loss in the supply system, a non-return valve is provided in the fuel pump outlet. When the ignition is switched off, and the fuel pump ceases operation, pressure is thus maintained for some time.

Fuel Volume

2.16 Litres per minute

Fuel Pressure

Condition	Pressure
At idle with vacuum	2.3 to 2.7 bar
At idle without vacuum	2.8 to 3.2 bar
Max pressure	4.5 bar

Holding Pressure

After 1 minute drop no more than 0.5 bar.
See Chapter 3 for details of fuel system test procedures.

Fuel Pump

The models fitted with Moronic MP3.2 can be fitted with the fuel pump either immersed in the fuel tank or fitted outside and close to the fuel tank.

External Pump (see Illustration 5.39)

A roller type fuel pump, driven by a permanent magnet electric motor mounted close to the fuel tank, draws fuel from the tank and pumps it to the fuel rail via a fuel filter. The pump is of the 'wet' variety in that fuel actually flows through the pump and the electric motor. There is no actual fire risk because the fuel drawn through the pump is not in a combustible condition.

Mounted upon the armature shaft is an eccentric rotor holding a number of pockets arranged around the circumference – each pocket containing a metal roller. As the pump is actuated, the rollers are flung outward by centrifugal force to act as seals. The fuel between the rollers is forced to the pump pressure outlet. A fuel pressure damper is mounted before the fuel rail to reduce the pulsating effects of pump operation. The appearance of the damper is similar to the pressure regulator but without a vacuum pipe.

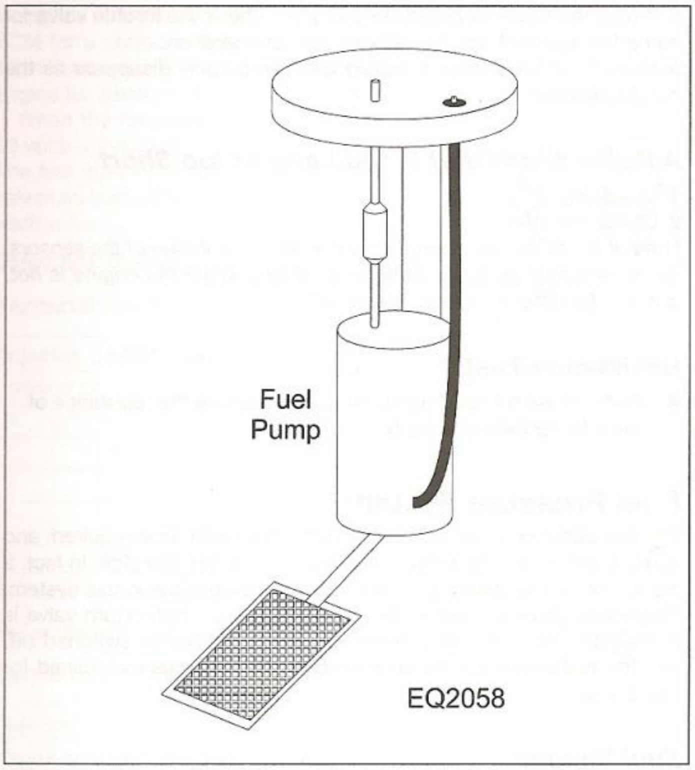

5.40 Internal Fuel Pump

Internal Pump (see Illustration 5.40)

The fuel pump is mounted vertically in the fuel tank and comprises an outer and inner gear assembly termed a gerotor. Once the pump motor becomes energised, the gerotor rotates and as the fuel passes through the individual teeth of the gerotor, a pressure differential is created. Fuel is drawn through the pump inlet, to be pressurised between the rotating gerotor teeth and discharged from the pump outlet into the fuel supply line.

Fuel Pump Voltage Measurements

Terminal Numbers

Fuel Relay	Fuel pump	Item	Volts
Cranking/running			
9	2	Supply voltage via 20A fuse	nbv
—	1	Earth connection	0.25 max

For local wiring diagram **(see Illustration 5.2 or 5.3 or 5.4 or 5.5 or 5.6)**

Note: *The supply voltage is only available with the engine cranking or running. To run the fuel pump with the ignition Key On (engine stopped) it is necessary to by-pass the relay*

External Influences

- Faulty battery connections
- Ignition switch
- Wiring
- Relay
- Inertia switch or fuse
- Low battery voltage
- Blocked fuel filter in fuel tank
- Trapped, squashed or faulty fuel lines

See Chapter 3 for details of fuel pump test procedures.

Fuel Pressure Regulator

Fuel pressure in the fuel rail is maintained at a constant 3.0 bar by a fuel pressure regulator. The pressure regulator is fitted on the outlet side of the fuel rail and consists of two chambers separated by a diaphragm. The upper chamber contains a spring that exerts pressure upon the lower chamber and closes off the outlet diaphragm. Pressurised fuel flows into the lower chamber and this exerts pressure upon the diaphragm. Once the pressure exceeds 3.0 bar, the outlet diaphragm is opened and excess fuel flows back to the fuel tank via a return line.

A vacuum hose connects the upper chamber to the inlet manifold so that variations in inlet manifold pressure will not affect the amount of fuel injected. This means that the pressure in the rail is always at a constant pressure above the pressure in the inlet manifold. The quantity of injected fuel thus depends solely on injector opening time, as determined by the ECM, and not on a variable fuel pressure.

At idle speed with the vacuum pipe disconnected, or with the engine stopped and the pump running, or at WOT the system fuel pressure will be approximately 3.0 bar. At idle speed (vacuum pipe connected), the fuel pressure will be approximately 0.5 bar under the system pressure.

Fuel Pump Relay

Main and Fuel Pump Relays (Single Dual Contact Relay)

The Bosch Motronic electrical system is controlled by a single 15-terminal relay **(see Illustration 5.41 & 5.42)** with dual contacts. A permanent voltage supply is made to relay terminals No 8, No 11, No 14 and No 15 from the battery positive terminal.

When the ignition is switched on, the ECM connects relay terminal No 7 to earth which energises the first relay winding.

When the relay winding is energised, this causes the relay contacts to close and terminal No 15 is connected to terminals No 4, No 5, No 6 and No 13. A voltage supply is thus output to ECM terminal No 37 and the injectors, ISCV and other actuators.

When the ignition is switched on the ECM briefly earths relay terminal No 10 at ECM pin No 3. This energises the second relay winding, which closes the second relay contact and connects voltage

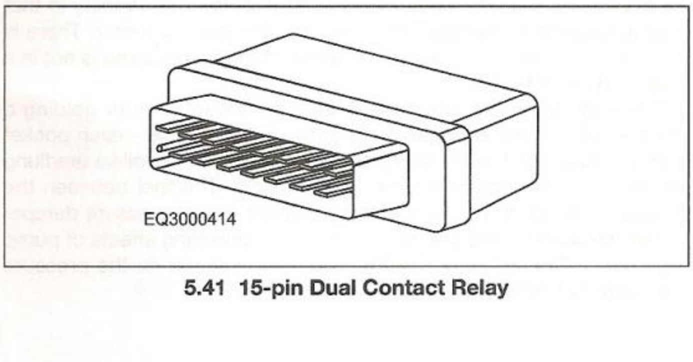

5.41 15-pin Dual Contact Relay

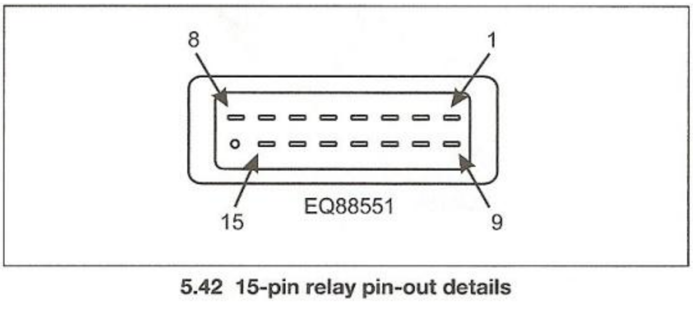

5.42 15-pin relay pin-out details

from terminal No 11 to terminal No 9, thereby providing voltage to the fuel pump circuit. After approximately one second, the ECM opens the circuit and the pump stops. This brief running of the fuel pump allows pressure to build within the fuel pressure lines, and provides for an easier start.

The second circuit will then remain open until the engine is cranked or run. Once the ECM receives a speed signal from the CAS, the ECM will again energise the second winding, and the fuel pump, ignition and injection will run until the engine is stopped.

Main Relay

Terminal	Condition	Relay	Volts
8, 11, 14, 15	Ignition off	Connected/disconnected	nbv
3	Ignition on	Connected/disconnected	nbv
7	Ignition on	Connected	1.25 max
10	Ignition on	Connected	nbv
10	Cranking/running	Connected	1.25 max
4, 5, 6, 13	Ignition on	Connected	nbv
1, 9	Cranking/running	Connected	nbv

Terminal	Source/destination
1	Relay output voltage to ignition coils: t2, TBH: t2, OS : t2
2	Unused
3	Main relay supply to relay: t5
4	Relay output voltage to ECM: t37
5	Relay output voltage to VASC: t2, relay: t3
6	Relay output voltage to ISCV: t2, CFSV: t2
7	Relay driver, ECM: t36
8	Battery supply to relay: t30
9	Relay output to fuel pump: t2
10	Relay driver, ECM: t3
11	Battery supply to relay: t30
12	Unused
13	Relay output to injectors: t2
14	Battery supply to relay: t30
15	Battery supply to relay: t30

For local wiring diagram **(see Illustration 5.2 or 5.3 or 5.4 or 5.5 or 5.6)**
See Chapter 3 for details of relay test procedures.

Catalytic Converter and Emission Control

All versions of the Bosch Motronic MP3.2 injection system are equipped with a catalytic converter and implement a closed loop control system so that exhaust emissions may be reduced. Closed loop systems are equipped with an oxygen sensor that monitors the exhaust gas for oxygen content. A low oxygen level in the exhaust signifies a rich mixture. A high oxygen level in the exhaust signifies a weak mixture.

Carbon Filter Solenoid Valve (CFSV)

A Carbon Filter Solenoid Valve (CFSV) **(see Illustration 5.43)** and activated carbon canister is employed in catalyst equipped vehicles to aid evaporative emission control. The carbon canister stores and absorbs fuel vapours until the Bosch Motronic ECM, under certain operating conditions, opens the CFSV. Once the ECM actuates the CFSV, fuel vapours are drawn into the engine side of the throttle body by manifold vacuum, where the engine, during normal combustion, burns them.

During the time that the ignition is switched off, the CFSV is open. As soon as the ignition is switched on, the CFSV closes. Once the engine is running, the CFSV will be modulated (pulsed) on and off by the ECM at intervals determined by the ECM. When the ECM goes into the CFSV cycle, the CFSV is modulated twice per second for 15 seconds. When the engine is shut down and the ignition is switched off, the ECM will close the CFSV for a few seconds to prevent any tendency by the engine to 'run-on'.

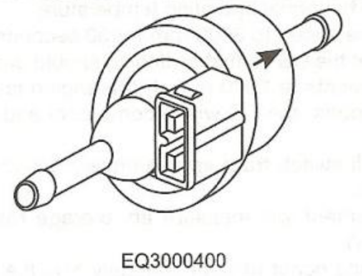

5.43 Carbon Filter Solenoid Valve (CFSV)

CFSV Voltage Measurement

Terminal Numbers

CFSV	Component	Item	Volts
Ignition on			
2	Relay: t6	Supply voltage	nbv
1	ECM: t5	Switching wire	nbv
Engine running			
1	ECM: t5	Switching voltage	0 to nbv

For local wiring diagram **(see Illustration 5. 2 or 5.3 or 5.4 or 5.5 or 5.6)**

CFSV Resistance Measurement

Terminal Numbers

CFSV	ECM	Res. (Ω)
1 and 2	—	50

External Influences

- Trapped or leaking vacuum hoses and connections

Checking the CFSV (general)

1 Inspect the CFSV multi-plug for corrosion, and damage.
2 Check that the connector terminal pins are fully pushed home and making good contact with the CFSV multi-plug.

Checking the CFSV Operation

1 The CFSV can be actuated through the SD serial port. Refer to 'Chapter 15 Self-Diagnosis and Fault Codes' for a description of the method.
2 If the CFSV does not actuate, make the following tests
3 Ignition on, check for nbv at the CFSV supply terminal
4 If no voltage, trace the wiring back to the main FI relay.
5 Check the CFSV resistance.
6 Disconnect the ECM multi-plug (see Warnings No 3 in the Reference section) and use a jumper lead to very briefly touch the switching terminal in the ECM multi-plug to earth.

7 If the CFSV actuates, check the ECM main voltage supplies and earths. If tests reveal no fault, the ECM is suspect.

8 If the CFSV does not actuate, check for continuity of wiring between the CFSV and the ECM switching terminal.

9 If the wiring is satisfactory, the CFSV is suspect.

CFSV Resistance

- Remove the multi-plug and measure the resistance of the CFSV between the two terminals.

Oxygen Sensor (OS)

The Oxygen Sensor (OS) **(see Illustration 5.44)** closed loop voltage is quite low and switches between 100 mV (weak) to 1.0 volt (rich). The signal actually takes the form of a switch and switches from weak to rich at the rate of approximately 1 HZ. A digital voltmeter connected to the signal wire, would display an average voltage of approximately 0.45 volts. In the event of OS circuit failure, the ECM substitutes a constant voltage of 0.45 volts and this should not be confused with the average voltage of 0.45 which occurs during switching from approximately 1.0 volt to 0.1 volt.

When the engine is operating under closed loop control, the OS signal causes the ECM to modify the injector pulse so that the AFR is maintained close to the stoichiometric ratio. By controlling the injection pulse, during most operating conditions, so that the air/ fuel ratio is always in a small window around the Lambda point (i.e. Lambda = 0.98 to 1.04), almost perfect combustion is achieved. Thus the Catalyst has less work to do and it will last longer with fewer emissions at the tail pipe.

The closed loop control is implemented during engine operation at engine normal operating temperature. When the coolant temperature is below 70°C or the engine is at full load or is on the overrun the ECM will operate in open loop. When operating in open loop, the ECM allows a richer or leaner AFR than the stoichiometric ratio. This prevents engine hesitation, for example, during acceleration with a wide-open throttle.

The OS only produces a signal when the exhaust gas, has reached a minimum temperature of approximately 300 degrees centigrade. In order that the OS will reach optimum-operating temperature as quickly as possible after the engine has started, the OS contains a heating element.

The OS heater supply is connected to the main relay terminal No 9 (fuel pump supply) (306 only) or to terminal No 1 (the ignition coil and Inlet Manifold Heater) (all other models). Terminals No 1 and No 9 are grouped together in the relay. This ensures that the OS heater will only operate whilst the engine is running.

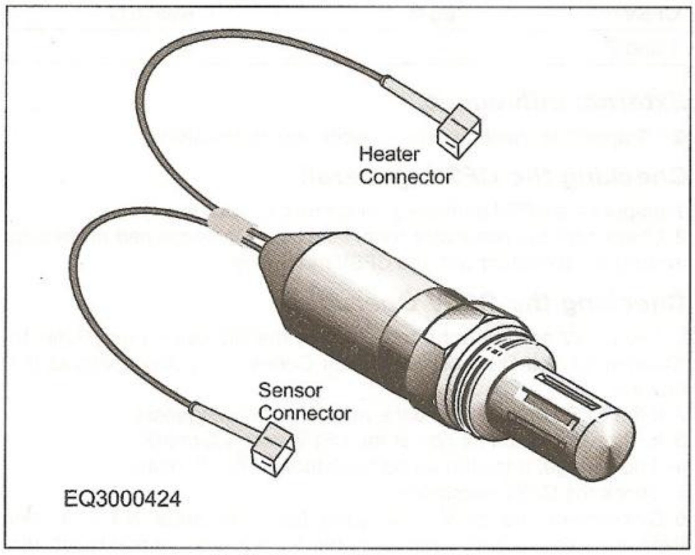

5.44 Oxygen Sensor (OS)

OS Voltage Measurements

Terminal Numbers

OS	Component	Item	Condition	Volts
Ignition on/running				
1			Heater earth	0.25 max
2	FI relay: t1	Heater supply	nbv	
4	ECM: t10	Signal return		0.25 max
3	ECM: t28	Signal wire	Ignition Key On	0.4 to 0.5 volts
			Engine running	200 to 1000 mV
			Throttle fully-open	1.0 volt constant
			Fuel cut-off	0 volt constant
			Switching frequency	1 sec intervals (approx.)

For local wiring diagram **(see Illustration 5. 2 or 5.3 or 5.4 or 5.5 or 5.6)**

External Influences

- Poor OS earth
- Fouled OS
- Vacuum leaks
- Ignition or fuel system defects
- Oil thinning
- Clogged air filter
- Leaded fuel
- Low fuel pressure
- Exhaust leaks (upstream of OS)

OS Signal Tests

1 Connect the negative oscilloscope or voltmeter probe to an engine earth.

2 Connect the positive oscilloscope or voltmeter probe to the wire attached to the OS signal terminal No 3.

3 A useful aid to diagnosis is a gas analyser attached to the exhaust system. A 4-gas analyser with Lambda will give best results.

4 The gas analyser should indicate the following:

- CO: as specified
- HC: less than 50 ppm
- CO_2: greater than 15.0
- O_2 less than 2.0
- Lambda: 1.0 ± 0.04

OS Switching

1 Ignition on: 0.5 volts should be obtained.

2 If no voltage, check continuity of wiring back to the ECM signal terminal.

3 Run the engine to normal operating temperature.

4 Raise the engine speed to 3000 rpm for 30 seconds. This will raise the temperature of the OS so that switching should occur.

5 Take measurements at 2000 rpm. If the engine is allowed to idle for prolonged periods, the OS will become cool and switching may stop.

6 The voltage will switch from approximately 0.8 volts (800 mV) to 0.2 volts (200 mV).

7 A digital instrument will measure an average reading of about 0.45 volts (450 mV).

8 Switching should occur at approximately 1Hz (i.e. one pulse per second).

9 If the oscilloscope can be set to a timebase greater than one

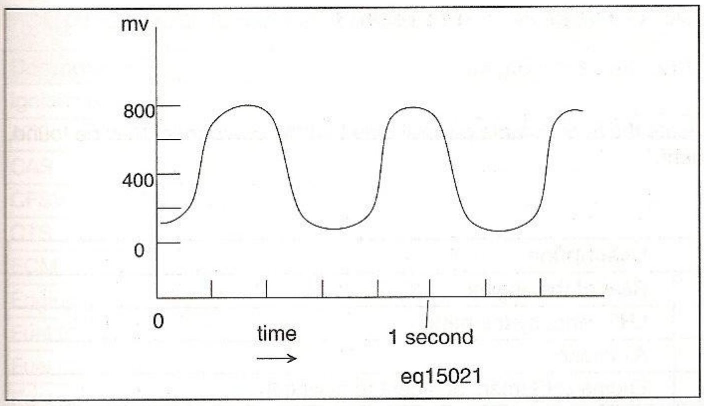

5.45 Typical output signal from the OS

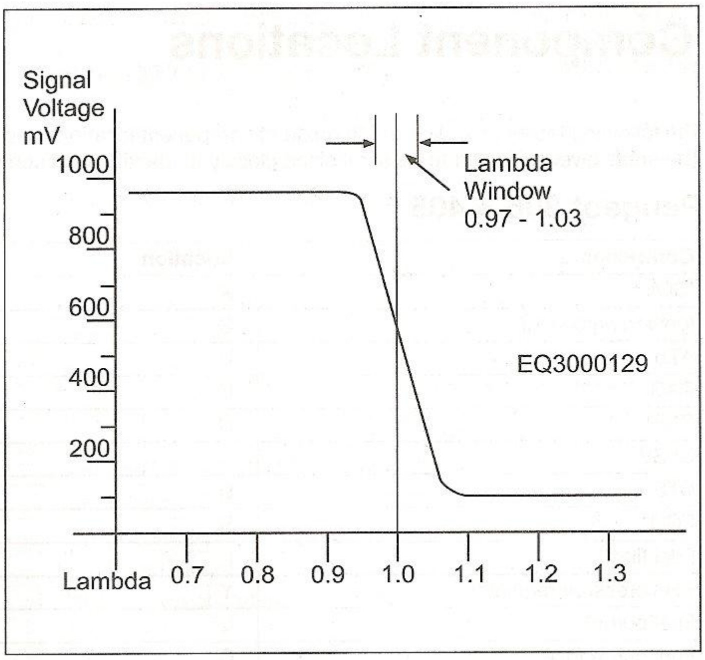

5.46 Typical graph of output voltage against lambda

second, a sinusoidal switching waveform can be obtained **(see Illustration 5.45)**.

10 If the voltage reading is mainly 0.6 to 1.0 volts the gases in the exhaust pipe have little oxygen which signifies a rich mixture **(see Illustration 5.46)**.

11 If the voltage is mainly 0.2 to 0.6 volts the gases in the exhaust pipe have excess oxygen. This could signify one of the following conditions:

- Vacuum leak
- Weak mixture
- Misfire
- Mechanical fault
- Ignition fault
- Exhaust leak (before the OS)
- Slow switching (much greater than 1 Hz) could indicate a fouled OS.

OS Heater Tests

1 Check for nbv at OS terminal No 2.

2 If no voltage, trace the wiring back to the OS heater supply i.e. relay, ignition switch etc as appropriate.

3 Check the OS heater earth connection

Component Locations

The following tables provide a rough guide of component locations and indicate the approximate general area that the component may be found. The areas given will need to be scrutinised closely to identify each component.

Peugeot 306 & 405

Component	Location	Description
ICOV	X	Rear of the engine
Ignition amplifiers	S	LHS wing, by the battery
ATS	U	Air intake
CAS	U	Engine LHS (rear), adjacent to flywheel
CMP	U	Cylinder head LHS
CFSV	O	Information unavailable at present
CTS	U	Engine LHS
ECU	S	Engine bay LHS, at the rear
Fuel filter	L	Close to fuel tank
Fuel pressure regulator	Y	On the fuel rail
Fuel pump	L	Outside fuel tank
Fuel pump fuse	C	Relay/fuse box, RHS wing
Ignition coils	Y	One fitted to the top of each spark plug
Injectors	Y	Intake manifold
ISCV	U	Engine LHS, close to the throttle body
Knock sensor	Y	Front of the engine
MAP	S	Inside the ECM, engine bay LHS, at the rear
OS	Z	Exhaust, rear of engine bay
OS connectors	S	Engine bay LHS, below the battery
Relay: fuel injection	C	Relay/fuse box, RHS wing
SD connector	C	Relay/fuse box, RHS wing
Throttle body heater	U	Upon the throttle body
TPS	U	Upon the throttle body
VSS	Z	Rear of the engine bay

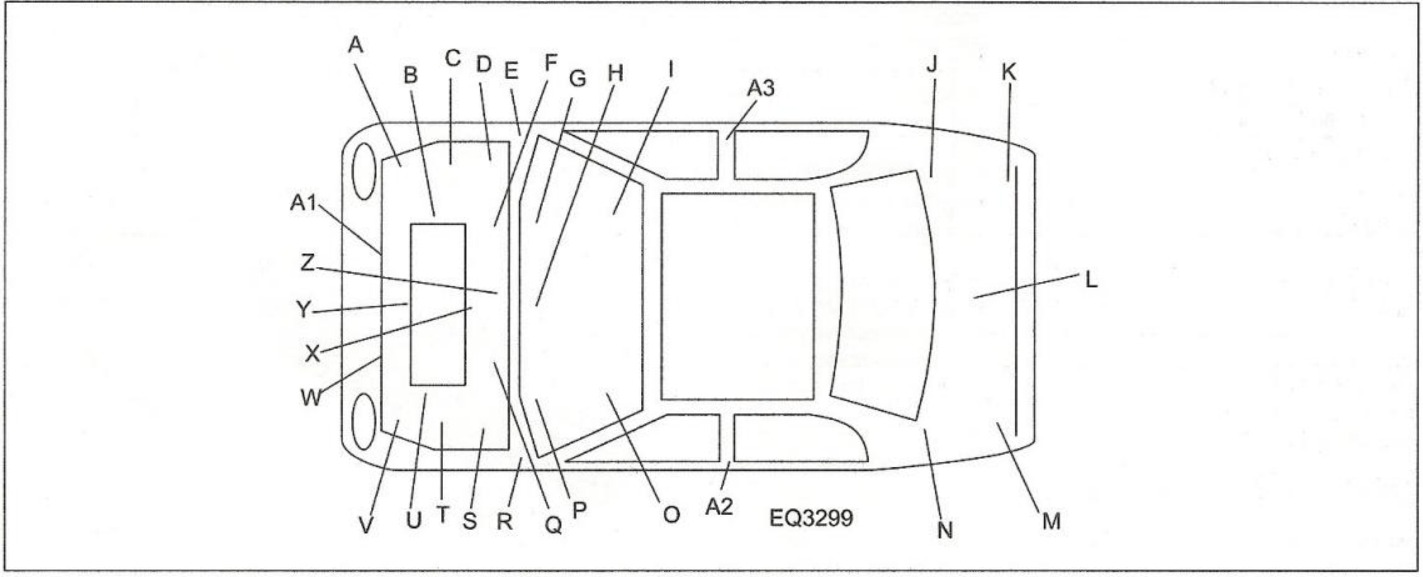

5.47 Component location diagram

Peugeot 605 & Citroën XM

Component	Location	Description
Ignition amplifier	S	LHS wing, at the back
ATS	U	Air intake
CAS	U	Engine LHS (rear), adjacent to flywheel
CFSV	A	Engine bay RHS, close to headlamp
CTS	U	Engine LHS
ECM	C	Engine bay RHS
Engine code	Y	Front top of the engine block
Fuel filter	L	Close to fuel tank
Fuel pressure regulator	Y	On the fuel rail
Fuel pump	L	Outside fuel tank
Fuel pump fuse	S	Fuse and relay box LHS rear of engine bay on wing
Ignition coils	Y	One fitted to the top of each spark plug
Injectors	Y	Intake manifold
ISCV	U	Engine compartment, LHS
MAP	S	Inside the ECM, engine bay LHS, behind the battery
OS	Z	Exhaust, rear of engine bay
relay: fuel injection	T	LHS wing
SD connector	T	LHS wing
TBCV	F	In front of the engine bulkhead, RHS
TPS	U	Upon the throttle body
VSS	Z	Rear of the engine bay
VIN plate	A1	On the bonnet ledge

Citroën Xantia & ZX

Component	Location	Description
ICOV	X	Rear of the engine
Ignition amplifiers	S	LHS wing, at the back
ATS	U	Air intake
CAS	U	Engine LHS (rear), adjacent to flywheel
CMP	U	Cylinder head LHS
CFSV	A	Engine bay RHS, close to headlamp
CTS	U	Engine LHS
ECU	S	Engine bay LHS, behind the battery
Fuel filter	L	Close to fuel tank
Fuel pressure regulator	Y	On the fuel rail
Fuel pump (Xantia)	L	Outside fuel tank
Fuel pump (ZX)	L	Inside fuel tank
Ignition coils	Y	One fitted to the top of each spark plug
Injectors	Y	Intake manifold
ISCV	U	Engine LHS, close to the throttle body
Knock sensor	Y	Front of the engine
MAP	S	Inside the ECM, engine bay LHS, behind the battery
OS	Z	Exhaust, rear of engine bay
OS connectors	S	Engine bay LHS, next to the ECM
Relay: fuel injection	T	LHS wing
SD connector	T	LHS wing
Throttle body heater	U	Upon the throttle body
TPS	U	Upon the throttle body
VSS	Z	Rear of the engine bay